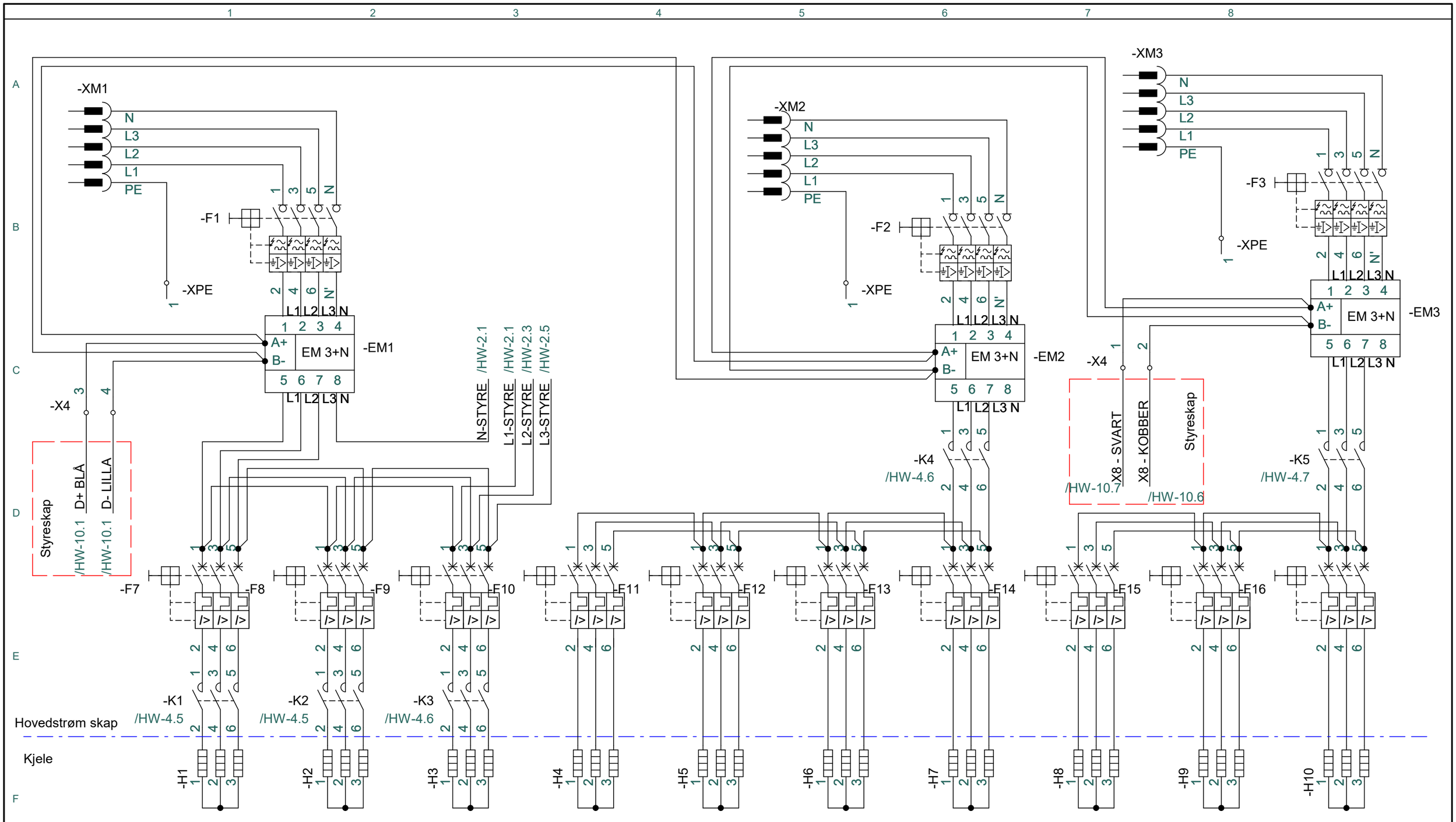

PCSCHEMATIC Automation

Project title:	**El og Hybrid**	**Project no.:**	**100KW maskin**	**Project rev.:**	**Page** **HW-1**
Customer:		DCC:			Scale: 1:1
Page title:	Hovedstrøm	Dwg. no.:		Page rev.:	Previous page:
File name:	El og Hybrid 100kW - Proto 1	Eng. (proj/page):	WEN	Last print: 16.06.2023	Next page: HW-2
Page ref.:		Appr. (date/init):		Last edit: 23.02.2023	Total no. of pages: 21

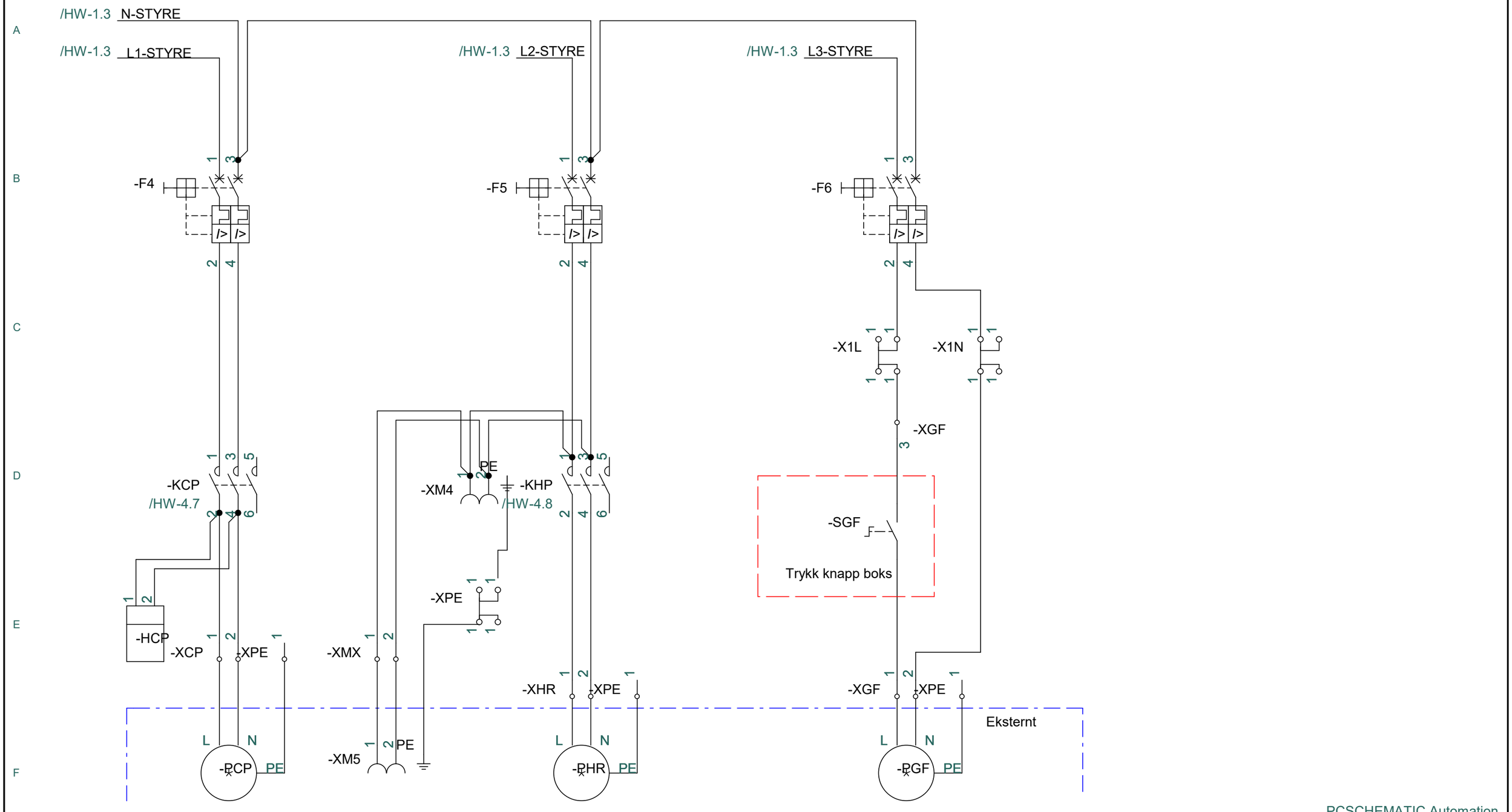

PCSCHEMATIC Automation

Project title:	**El og Hybrid**	**Project no.:**	**100KW maskin**	**Project rev.:**	**Page** **HW-2**
Customer:		DCC:			Scale: 1:1
Page title:	Styrestrøm	Dwg. no.:		Page rev.:	Previous page: HW-1
File name:	El og Hybrid 100kW - Proto 1	Eng. (proj/page):	WEN	Last print: 16.06.2023	Next page: HW-3
Page ref.:		Appr. (date/init):		Last edit: 22.02.2023	Total no. of pages: 21

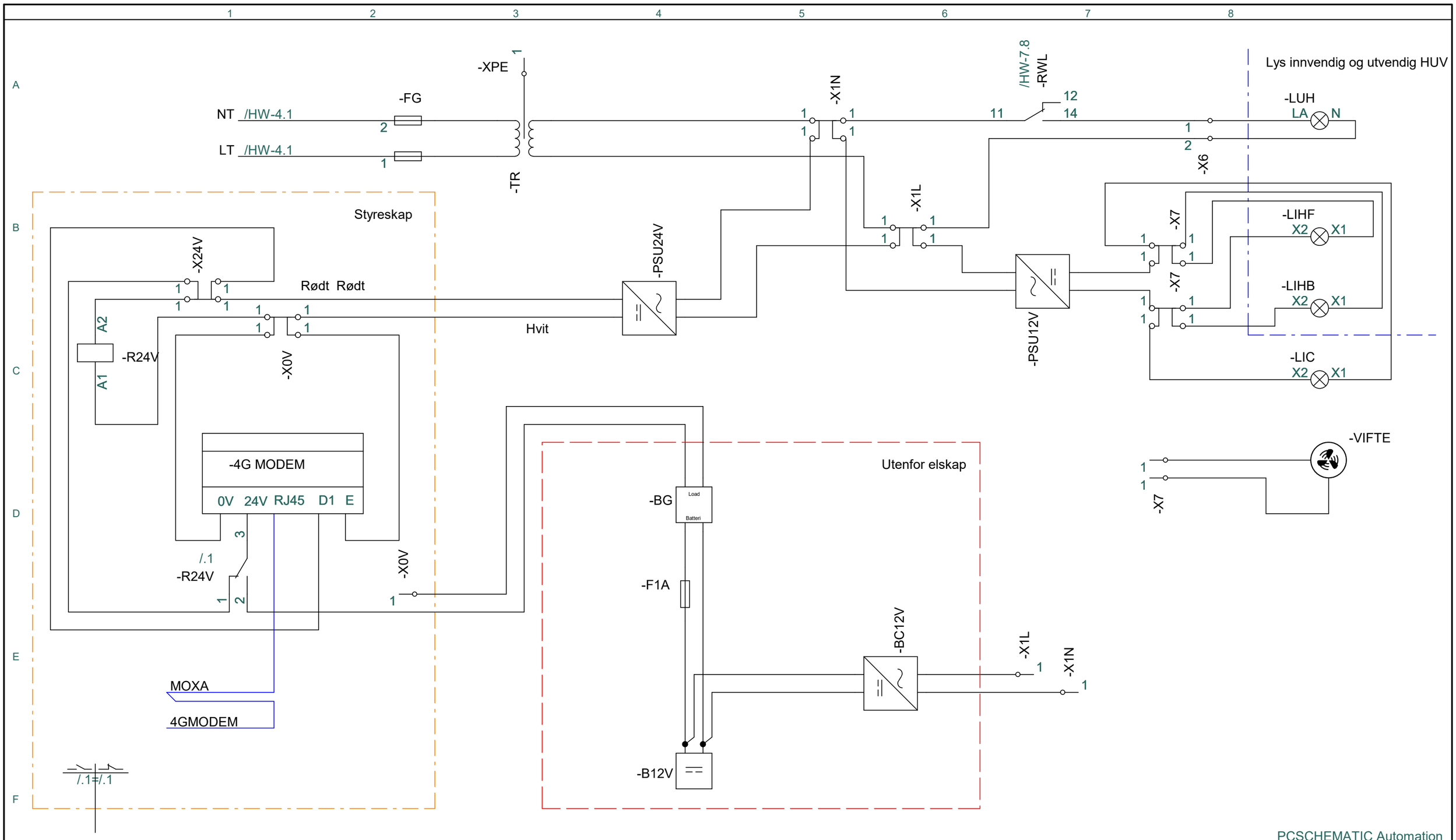

PCSCHEMATIC Automation

Project title:	**El og Hybrid**	**Project no.:**	**100KW maskin**	**Project rev.:**	**Page** **HW-3**
Customer:		DCC:			Scale: 1:1
Page title:	Styrestrøm	Dwg. no.:		Page rev.:	Previous page: HW-2
File name:	El og Hybrid 100kW - Proto 1	Eng. (proj/page):	WEN	Last print: 16.06.2023	Next page: HW-4
Page ref.:		Appr. (date/init):		Last edit: 23.02.2023	Total no. of pages: 21

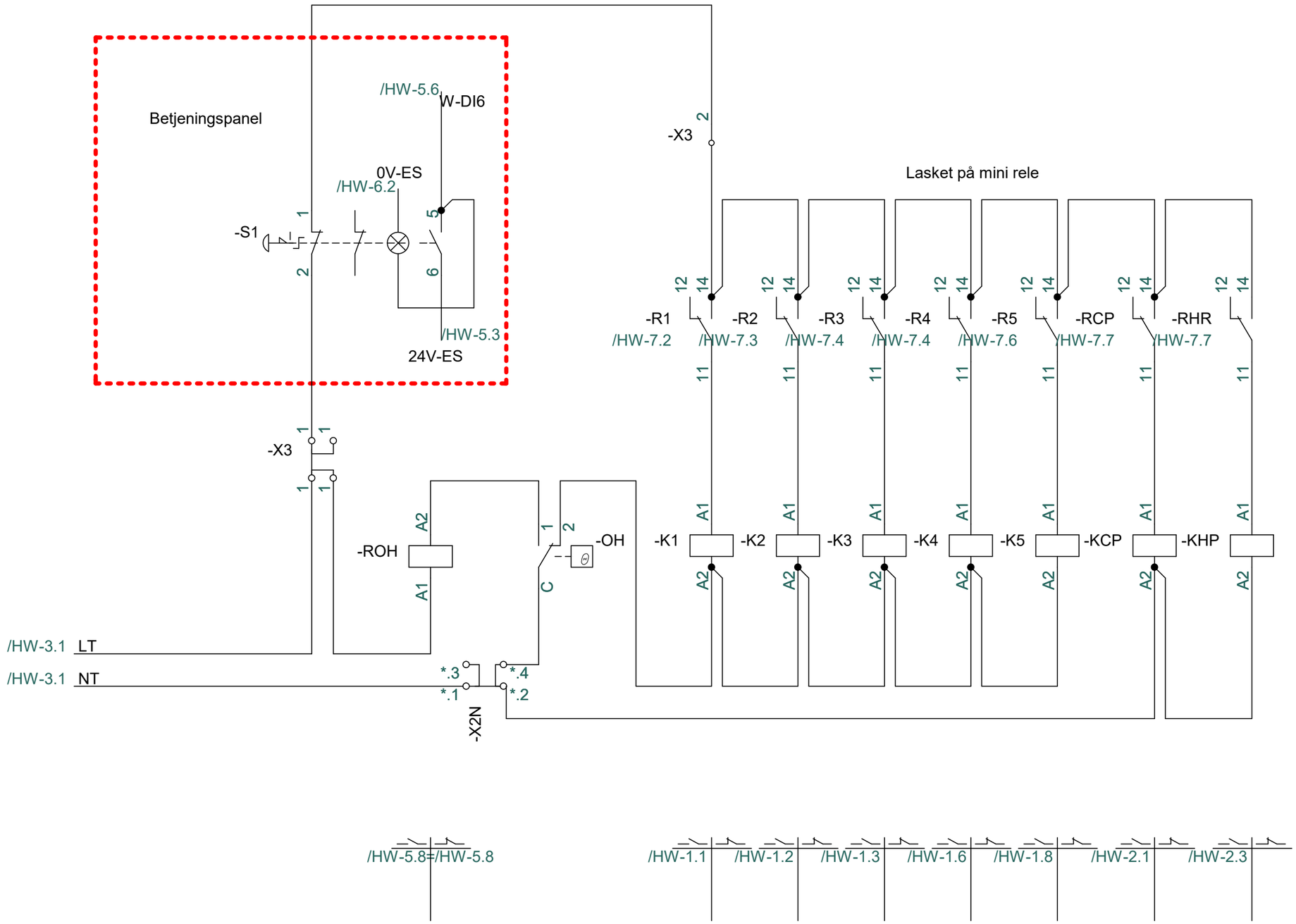

PCSCHEMATIC Automation

Project title:	**El og Hybrid**	**Project no.:**	**100KW maskin**	**Project rev.:**	**Page** **HW-4**
Customer:		DCC:			Scale: 1:1
Page title:	Styrestrøm	Dwg. no.:		Page rev.:	Previous page: HW-3
File name:	El og Hybrid 100kW - Proto 1	Eng. (proj/page):	WEN	Last print: 16.06.2023	Next page: HW-5
Page ref.:		Appr. (date/init):		Last edit: 22.02.2023	Total no. of pages: 21

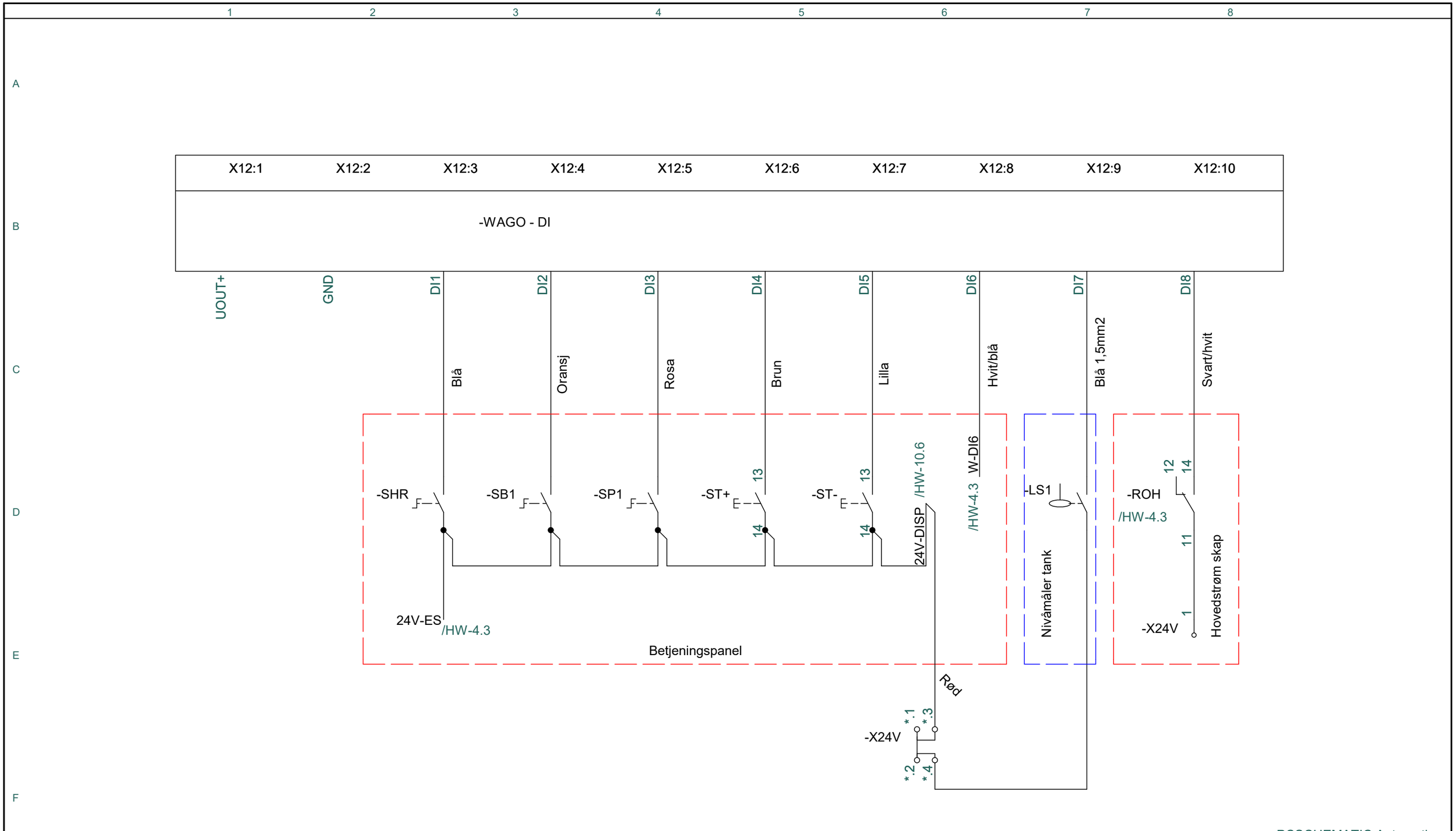

PCSCHEMATIC Automation

Project title:	**El og Hybrid**	**Project no.:**	**100KW maskin**	**Project rev.:**	**Page** **HW-5**
Customer:		DCC:			Scale: 1:1
Page title:	Diagram	Dwg. no.:		Page rev.:	Previous page: HW-4
File name:	El og Hybrid 100kW - Proto 1	Eng. (proj/page):	WEN	Last print: 16.06.2023	Next page: HW-6
Page ref.:		Appr. (date/init):		Last edit: 22.02.2023	Total no. of pages: 21

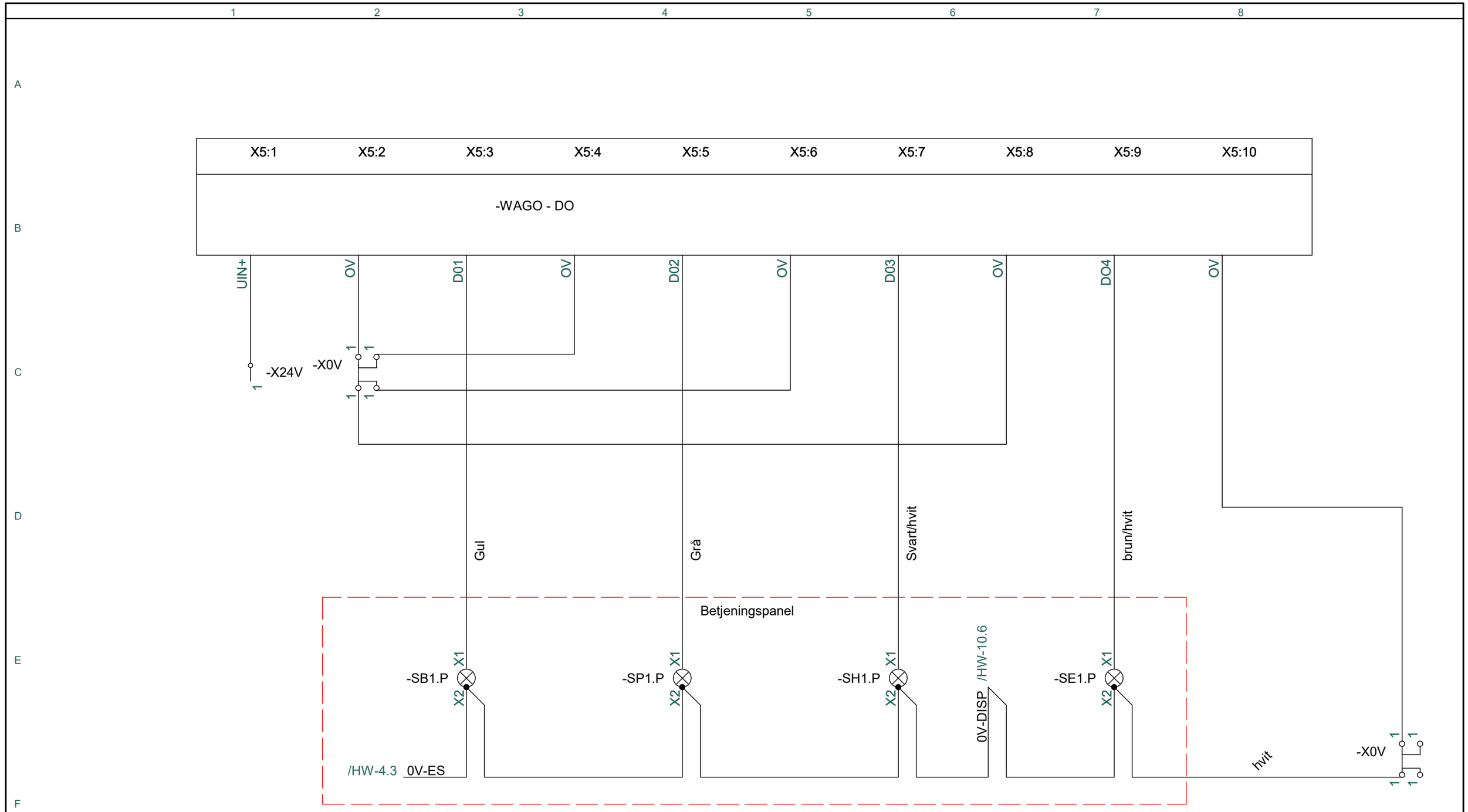

PCSCHEMATIC Automation

Project title:	**El og Hybrid**	**Project no.:**	**100KW maskin**	**Project rev.:**	**Page** **HW-6**
Customer:		DCC:			Scale: 1:1
Page title:	Diagram	Dwg. no.:		Page rev.:	Previous page: HW-5
File name:	El og Hybrid 100kW - Proto 1	Eng. (proj/page):	WEN	Last print: 16.06.2023	Next page: HW-7
Page ref.:		Appr. (date/init):		Last edit: 22.02.2023	Total no. of pages: 21

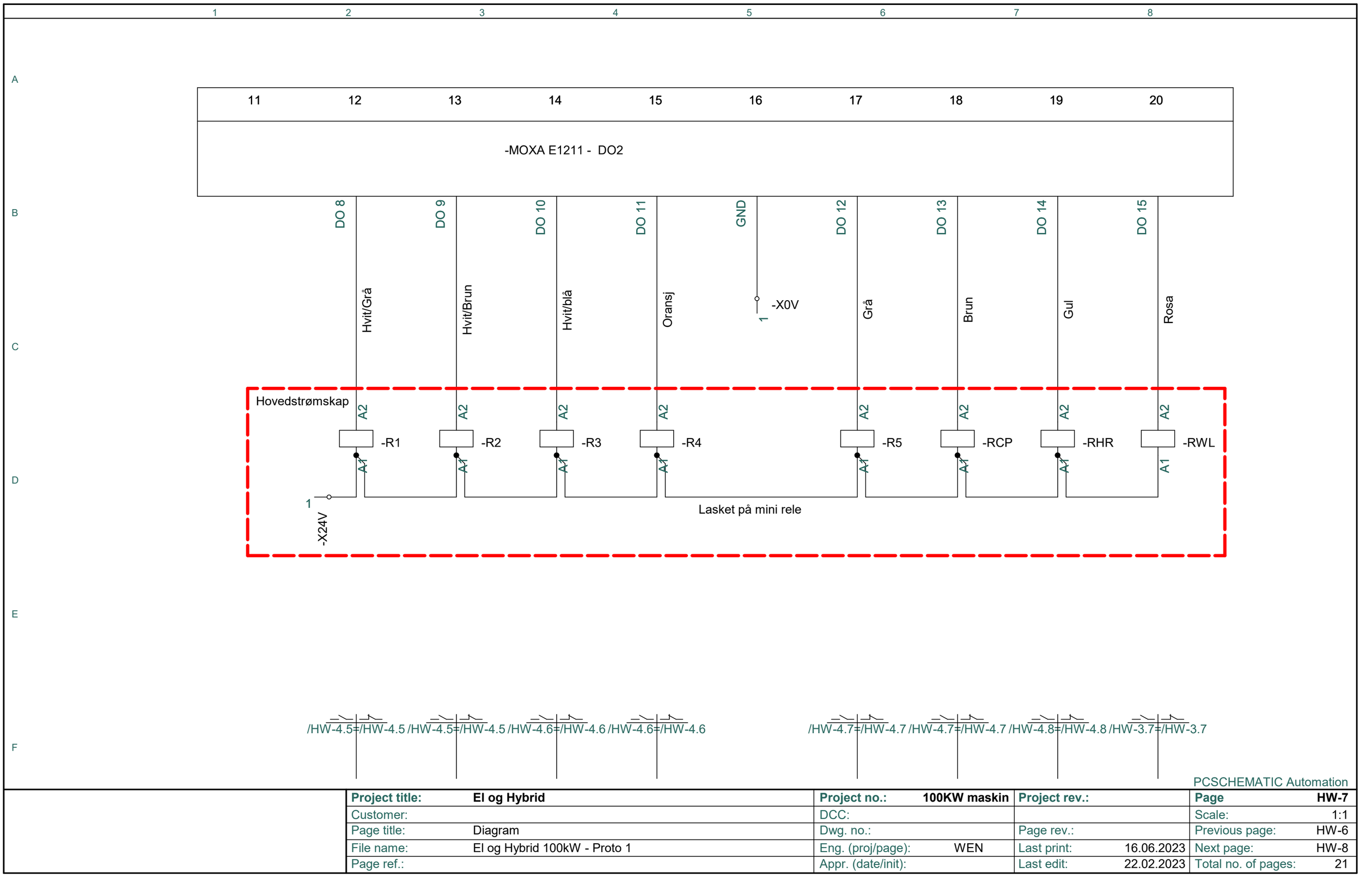

PCSCHEMATIC Automation

Project title:	**El og Hybrid**	**Project no.:**	**100KW maskin**	**Project rev.:**	**Page** **HW-7**
Customer:		DCC:			Scale: 1:1
Page title:	Diagram	Dwg. no.:		Page rev.:	Previous page: HW-6
File name:	El og Hybrid 100kW - Proto 1	Eng. (proj/page):	WEN	Last print: 16.06.2023	Next page: HW-8
Page ref.:		Appr. (date/init):		Last edit: 22.02.2023	Total no. of pages: 21

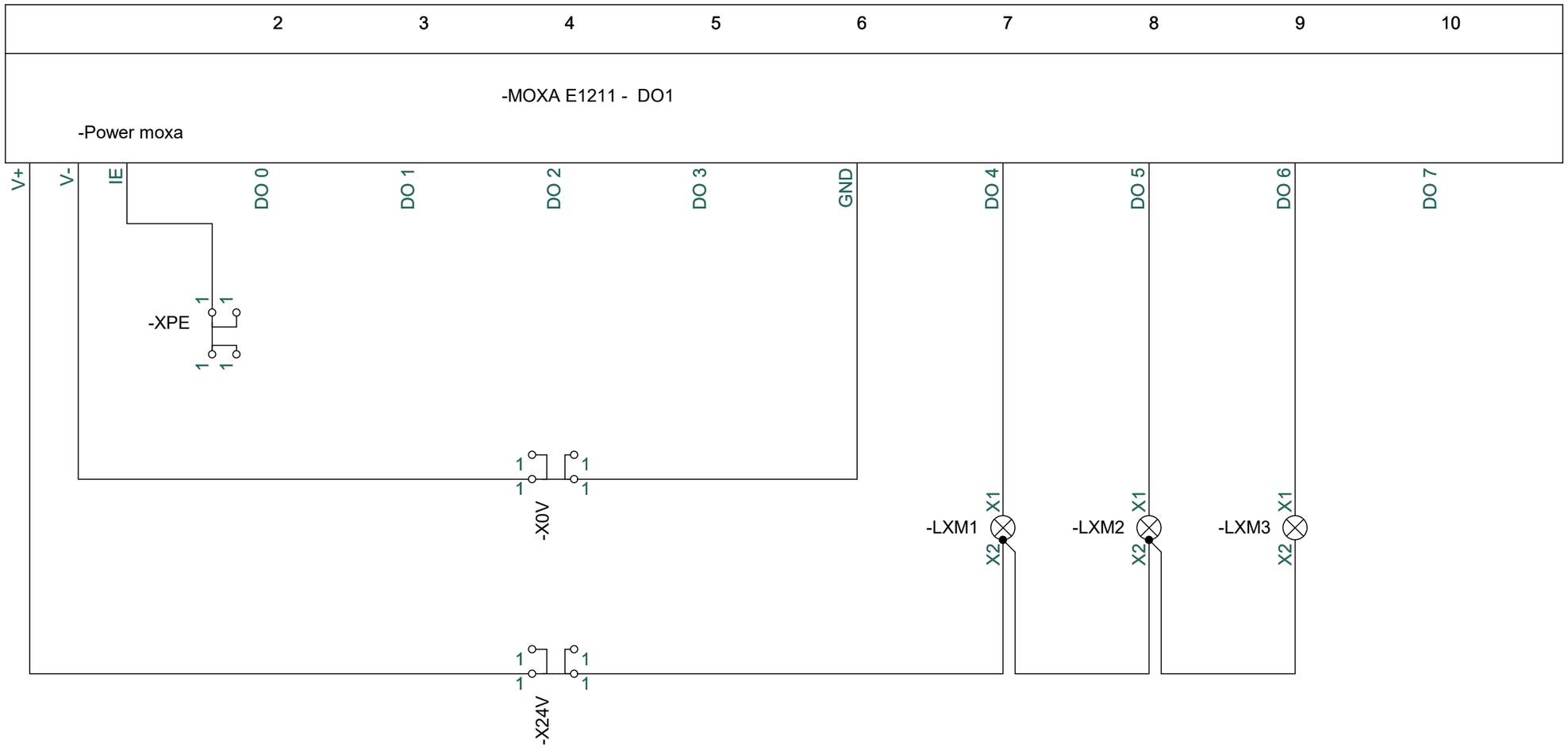

PCSCHEMATIC Automation

Project title:	**El og Hybrid**	**Project no.:**	**100KW maskin**	**Project rev.:**	**Page** **HW-8**
Customer:		DCC:			Scale: 1:1
Page title:	Diagram	Dwg. no.:		Page rev.:	Previous page: HW-7
File name:	El og Hybrid 100kW - Proto 1	Eng. (proj/page):	WEN	Last print: 16.06.2023	Next page: HW-9
Page ref.:		Appr. (date/init):		Last edit: 22.02.2023	Total no. of pages: 21

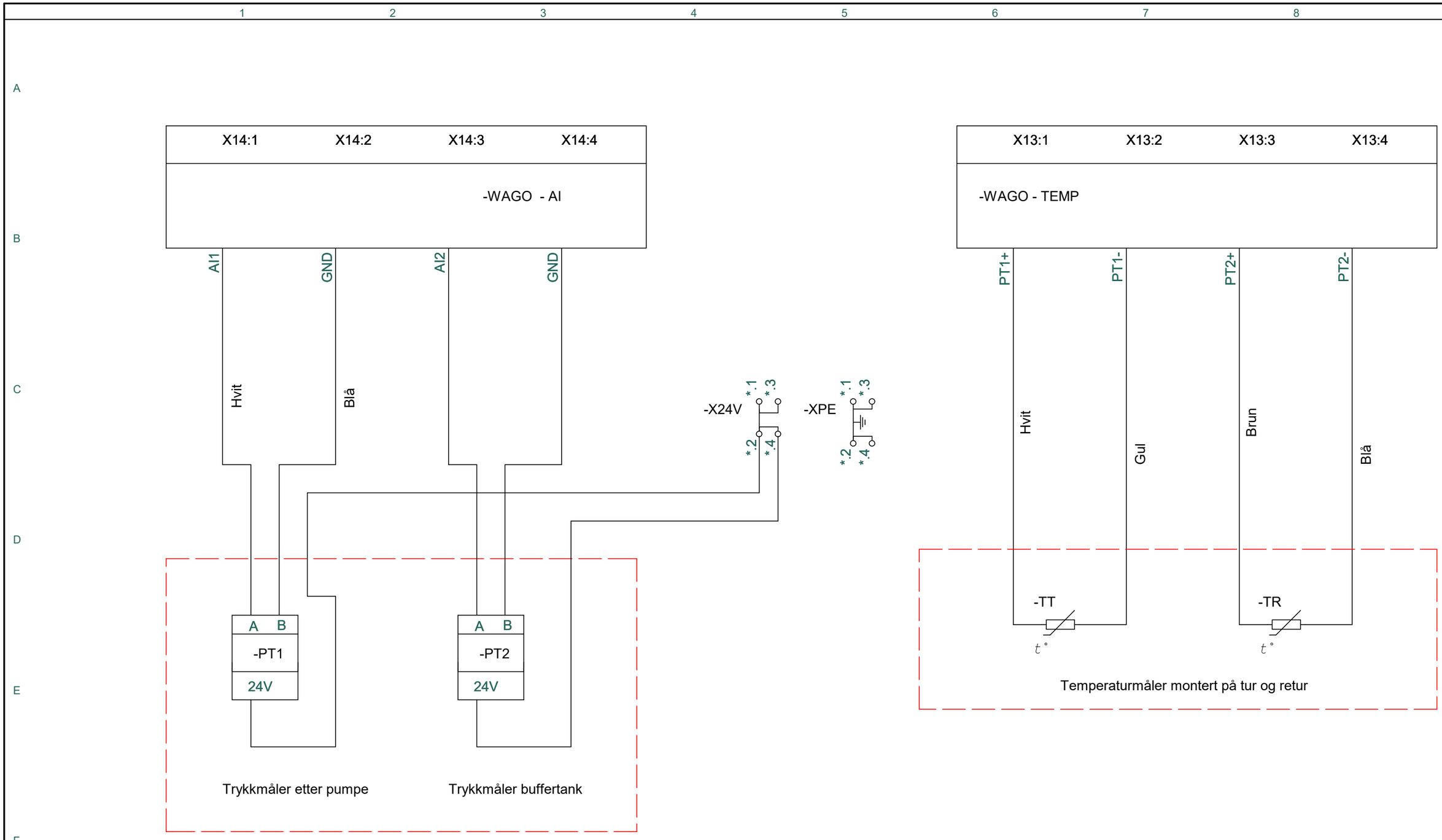

PCSCHEMATIC Automation

Project title:	**El og Hybrid**	**Project no.:**	**100KW maskin**	**Project rev.:**	**Page** **HW-9**
Customer:		DCC:			Scale: 1:1
Page title:	Diagram	Dwg. no.:		Page rev.:	Previous page: HW-8
File name:	El og Hybrid 100kW - Proto 1	Eng. (proj/page):	WEN	Last print: 16.06.2023	Next page: HW-10
Page ref.:		Appr. (date/init):		Last edit: 23.02.2023	Total no. of pages: 21

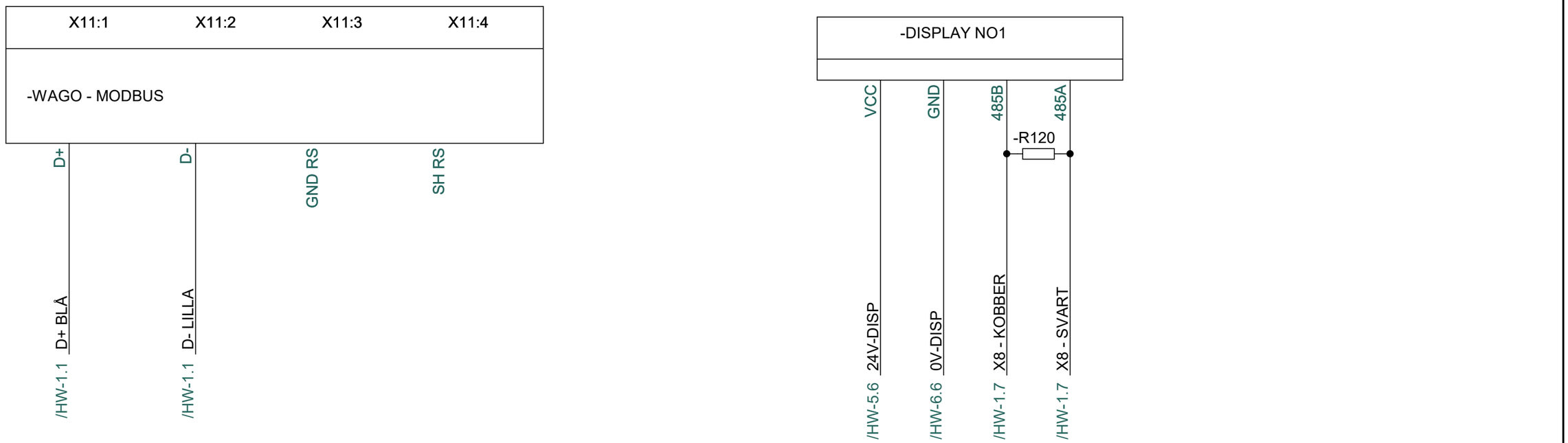

PCSCHEMATIC Automation

Project title:	**EI og Hybrid**	**Project no.:**	**100KW maskin**	**Project rev.:**	**Page** **HW-10**
Customer:		DCC:			Scale: 1:1
Page title:	Diagram	Dwg. no.:		Page rev.:	Previous page: HW-9
File name:	EI og Hybrid 100kW - Proto 1	Eng. (proj/page):	WEN	Last print: 16.06.2023	Next page: HW-C-1
Page ref.:		Appr. (date/init):		Last edit: 22.02.2023	Total no. of pages: 21

FROM	TO	Wire no	Signal	Cable	Jumper	Line name	Line type	Routing class
-R24V:A2	-X24V:1							Rødt
-R24V:A1	-X0V:1							
-X4:3	-EM1:A+							
-EM1:A+	-EM2:A+							
-EM2:A+	-EM3:A+							
-X4:1	-EM3:A+							
-X4:3	-WAGO - MODBUS:D+		D+ BLÅ					
-MOXA E1211 - DO1:V+	-X24V:1							
-X24V:1	-R24V:1							
-X4:4	-EM1:B-							
-EM1:B-	-EM2:B-							
-EM2:B-	-EM3:B-							
-X4:2	-EM3:B-							
-X4:4	-WAGO - MODBUS:D-		D- LILLA					
-XM1:N	-F1:N							
-XM1:L3	-F1:5							
-XM1:L2	-F1:3							
-XM1:L1	-F1:1							
-XM1:PE	-XPE:1							
-MOXA E1211 - DO1:V-	-X0V:1							
-HCP:1	-KCP:2							
-XCP:1	-KCP:2							
-X24V:1	-4G MODEM:D1							
-X24V:1	-PSU24V:3							Rødt
-HCP:2	-KCP:4							
-XCP:2	-KCP:4							
-4G MODEM:0V	-X0V:1							
-MOXA E1211 - DO1:IE	-XPE:1							

FROM	TO	Wire no	Signal	Cable	Jumper	Line name	Line type	Routing class
-R24V:3	-4G MODEM:24V							
-R24V:2	-BG:+							
-F7:1	-EM1:5		L1-STYRE					
-F7:1	-F8:1		L1-STYRE					
-F8:1	-F9:1		L1-STYRE					
-F9:1	-F4:1		L1-STYRE					
-K1:1	-F7:2							
-H1:2	-K1:2							
-H1:1	-H1:2							
-H1:2	-H1:3							
-WAGO - AI:AI1	-PT1:A							Hvit
-KCP:1	-F4:2							
-PCP:L	-XCP:1							
-X0V:1	-PSU24V:4							Hvit
-X0V:1	-4G MODEM:E							
-F7:3	-EM1:6		L2-STYRE					
-F7:3	-F8:3		L2-STYRE					
-F8:3	-F9:3		L2-STYRE					
-F9:3	-F5:1		L2-STYRE					
-K1:3	-F7:4							
-H1:2	-K1:4							
-F4:3	-F5:3		N-STYRE					
-EM1:8	-F4:3		N-STYRE					
-F5:3	-F6:3		N-STYRE					
-KCP:3	-F4:4							
-PCP:N	-XCP:2							
-F7:5	-EM1:7		L3-STYRE			2,5		
-F7:5	-F8:5		L3-STYRE					

FROM	TO	Wire no	Signal	Cable	Jumper	Line name	Line type	Routing class
-F8:5	-F9:5		L3-STYRE					
-F9:5	-F6:1		L3-STYRE					
-PT1:24V	-X24V:*.2							Brun
-K1:5	-F7:6							
-H1:2	-K1:6							
-X24V:1	-WAGO - DO:UIN+							
-PCP:PE	-XPE:1							
-PT1:B	-WAGO - AI:GND					Blå		Blå
-EM1:1	-F1:2							
-EM1:2	-F1:4							
-EM1:3	-F1:6							
-K2:1	-F8:2							
-H2:2	-K2:2							
-H2:1	-H2:2							
-H2:2	-H2:3							
-EM1:4	-F1:N'							
-K2:3	-F8:4							
-H2:2	-K2:4							
-X0V:1	-WAGO - DO:OV							
-X0V:1	-WAGO - DO:OV							
-X24V:1	-R1:A1							
-R1:A1	-R2:A1							
-R2:A1	-R3:A1							
-R3:A1	-R4:A1							
-R4:A1	-R5:A1							
-R5:A1	-RCP:A1							
-RCP:A1	-RHR:A1							
-RHR:A1	-RWL:A1							

FROM	TO	Wire no	Signal	Cable	Jumper	Line name	Line type	Routing class
-K2:5	-F8:6							
-XMX:1	-XM4:1							
-XM4:1	-KHP:1							
-KHP:1	-F5:2							
-H2:2	-K2:6							
-XM5:1	-XMX:1							
-X0V:1	-WAGO - DO:OV							
-X0V:1	-WAGO - DO:OV							
-FG:2	-X2N:*.1		NT					
-FG:1	-X3:1		LT					
-XMX:2	-XM4:2							
-XM4:2	-KHP:3							
-KHP:3	-F5:4							
-XM5:2	-XMX:2							
-S1:1	-X3:2							
-X3:1	-S1:2							
-WAGO - AI:AI2	-PT2:A							
-FG:2	-TR:2							
-FG:2	-TR:1							
-X3:1	-ROH:A1							
-SHR:1	-WAGO - DI:DI1					Blå		Blå
-SHR:2	-SB1:2		24V-ES					
-S1:6	-SHR:2		24V-ES					
-SB1:2	-SP1:2		24V-ES					
-SP1:2	-ST+:14		24V-ES					
-ST+:14	-ST-:14		24V-ES					
-ST-:14	-X24V:*.3		24V-ES					
-X24V:*.3	-DISPLAY NO1:VCC		24V-ES					Rød

FROM	TO	Wire no	Signal	Cable	Jumper	Line name	Line type	Routing class
-PT2:24V	-X24V:*.4							
-K3:1	-F9:2							
-H3:2	-K3:2							
-H3:1	-H3:2							
-H3:2	-H3:3							
-SB1.P:X1	-WAGO - DO:D01					Rosa		Gul
-SB1.P:X2	-SP1.P:X2		0V-ES					
-S1:1	-SB1.P:X2		0V-ES					
-SP1.P:X2	-SH1.P:X2		0V-ES					
-SH1.P:X2	-SE1.P:X2		0V-ES					
-SH1.P:X2	-DISPLAY NO1:GND		0V-ES					
-SE1.P:X2	-X0V:1		0V-ES					hvit
-K3:3	-F9:4							
-H3:2	-K3:4							
-PT2:B	-WAGO - AI:GND							
-B12V:1	-BG:+							
-B12V:1	-BC12V:3							
-S1:2	-S1:5		W-DI6					
-S1:5	-WAGO - DI:DI6		W-DI6					
-K3:5	-F9:6							
-H3:2	-K3:6							
-X0V:1	-MOXA E1211 - DO1:GND							
-X24V:1	-LXM1:X2							
-LXM1:X2	-LXM2:X2							
-LXM2:X2	-LXM3:X2							
-BG:-	-X0V:1							
-B12V:2	-BG:-							
-B12V:2	-BC12V:4							

FROM	TO	Wire no	Signal	Cable	Jumper	Line name	Line type	Routing class
-PSU24V:1	-X1N:1							
-PSU24V:2	-X1L:1							
-ROH:A2	-OH:1							
-TR:4	-X1N:1							
-TR:3	-X1L:1							
-SB1:1	-WAGO - DI:DI2							Oransj
-XHR:1	-KHP:2							
-PHR:L	-XHR:1							
-XHR:2	-KHP:4							
-PHR:N	-XHR:2							
-F10:1	-F11:1							
-F11:1	-F12:1							
-F12:1	-F13:1							
-F13:1	-K4:2							
-X2N:*.4	-OH:C							
-X2N:*.2	-KCP:A2							
-KCP:A2	-KHP:A2							
-H4:1	-H4:2							
-H4:2	-H4:3							
-PHR:PE	-XPE:1							
-F10:3	-F11:3							
-F11:3	-F12:3							
-F12:3	-F13:3							
-F13:3	-K4:4							
-F10:5	-F11:5							
-F11:5	-F12:5							
-F12:5	-F13:5							
-F13:5	-K4:6							

FROM	TO	Wire no	Signal	Cable	Jumper	Line name	Line type	Routing class
-OH:2	-K1:A2							
-K1:A2	-K2:A2							
-K2:A2	-K3:A2							
-K3:A2	-K4:A2							
-K4:A2	-K5:A2							
-SP1:1	-WAGO - DI:DI3							Rosa
-SP1.P:X1	-WAGO - DO:D02							Grå
-H5:2	-F11:2							
-H5:1	-H5:2							
-H5:2	-H5:3							
-BC12V:1	-X1L:1							
-BC12V:2	-X1N:1							
-H5:2	-F11:4							
-H5:2	-F11:6							
-R1:14	-X3:2							
-R1:14	-R2:14							
-R2:14	-R3:14							
-R3:14	-R4:14							
-R4:14	-R5:14							
-R5:14	-RCP:14							
-RCP:14	-RHR:14							
-K1:A1	-R1:11							
-ST+:13	-WAGO - DI:DI4							Brun
-XM2:N	-F2:N							
-XM2:L3	-F2:5							
-XM2:L2	-F2:3							
-XM2:L1	-F2:1							
-XM2:PE	-XPE:1							

FROM	TO	Wire no	Signal	Cable	Jumper	Line name	Line type	Routing class
-LXM1:X1	-MOXA E1211 - DO1:DO 4							
-K2:A1	-R2:11							
-H6:2	-F12:2							
-H6:1	-H6:2							
-H6:2	-H6:3							
-X1N:1	-RWL:11							
-X1N:1	-PSU12V:1							
-H6:2	-F12:4							
-X1L:1	-F6:2							
-XGF:3	-X1L:1							
-SGF:1	-XGF:3							
-XGF:1	-SGF:2							
-H6:2	-F12:6							
-PGF:L	-XGF:1							
-ST-:13	-WAGO - DI:DI5							Lilla
-F6:4	-X1N:1							
-XGF:2	-X1N:1							
-PGF:N	-XGF:2							
-K3:A1	-R3:11							
-SH1.P:X1	-WAGO - DO:D03							Svart/hvit
-PGF:PE	-XPE:1							
-LXM2:X1	-MOXA E1211 - DO1:DO 5							
-X1L:1	-X6:2							
-X1L:1	-PSU12V:2							
-X24V:*.4	-LS1:2							
-EM2:1	-F2:2							
-K4:1	-EM2:5							
-H7:2	-F13:2							

FROM	TO	Wire no	Signal	Cable	Jumper	Line name	Line type	Routing class
-H7:1	-H7:2							
-H7:2	-H7:3							
-WAGO - TEMP:PT1+	-TT:1							Hvit
-K4:A1	-R4:11							
-EM2:2	-F2:4							
-K4:3	-EM2:6							
-H7:2	-F13:4							
-DISPLAY NO1:485B	-R120:1		X8 - KOBBER					
-X4:2	-DISPLAY NO1:485B		X8 - KOBBER					
-EM2:3	-F2:6							
-K4:5	-EM2:7							
-H7:2	-F13:6							
-EM2:4	-F2:N'							
-R120:2	-DISPLAY NO1:485A		X8 - SVART					
-X4:1	-DISPLAY NO1:485A		X8 - SVART					
-LXM3:X1	-MOXA E1211 - DO1:DO 6							
-TT:2	-WAGO - TEMP:PT1-							Gul
-K5:A1	-R5:11							
-RWL:14	-X6:1							
-PSU12V:4	-X7:1							
-PSU12V:3	-X7:1							
-F14:1	-F15:1							
-F15:1	-F16:1							
-F16:1	-K5:2							
-H8:2	-F14:2							
-H8:1	-H8:2							
-H8:2	-H8:3							
-LS1:1	-WAGO - DI:DI7							Blå 1,5mm2

FROM	TO	Wire no	Signal	Cable	Jumper	Line name	Line type	Routing class
-F14:3	-F15:3							
-F15:3	-F16:3							
-F16:3	-K5:4							
-H8:2	-F14:4							
-SE1.P:X1	-WAGO - DO:DO4							brun/hvit
-KCP:A1	-RCP:11							
-F14:5	-F15:5							
-F15:5	-F16:5							
-F16:5	-K5:6							
-H8:2	-F14:6							
-X7:1	-LIC:X1							
-X7:1	-LIC:X2							
-X7:1	-VIFTE:4							
-X7:1	-VIFTE:3							
-WAGO - TEMP:PT2+	-TR:1							Brun
-XM3:N	-F3:N							
-XM3:L3	-F3:5							
-XM3:L2	-F3:3							
-XM3:L1	-F3:1							
-XM3:PE	-XPE:1							
-X7:1	-LIHB:X1							
-X7:1	-LIHF:X1							
-X7:1	-LIHF:X2							
-X7:1	-LIHB:X2							
-ROH:14	-WAGO - DI:DI8					Svart/Hvit		Svart/hvit
-KHP:A1	-RHR:11							
-X24V:1	-ROH:11							
-H9:2	-F15:2							

FROM	TO	Wire no	Signal	Cable	Jumper	Line name	Line type	Routing class
-H9:1	-H9:2							
-H9:2	-H9:3							
-X6:1	-LUH:LA							
-X6:2	-LUH:N							
-WAGO - DO:OV	-X0V:1							
-H9:2	-F15:4							
-TR:2	-WAGO - TEMP:PT2-							Blå
-H9:2	-F15:6							
-EM3:1	-F3:2							
-K5:1	-EM3:5							
-H10:2	-F16:2							
-H10:1	-H10:2							
-H10:2	-H10:3							
-EM3:2	-F3:4							
-K5:3	-EM3:6							
-H10:2	-F16:4							
-EM3:3	-F3:6							
-K5:5	-EM3:7							
-H10:2	-F16:6							
-EM3:4	-F3:N'							