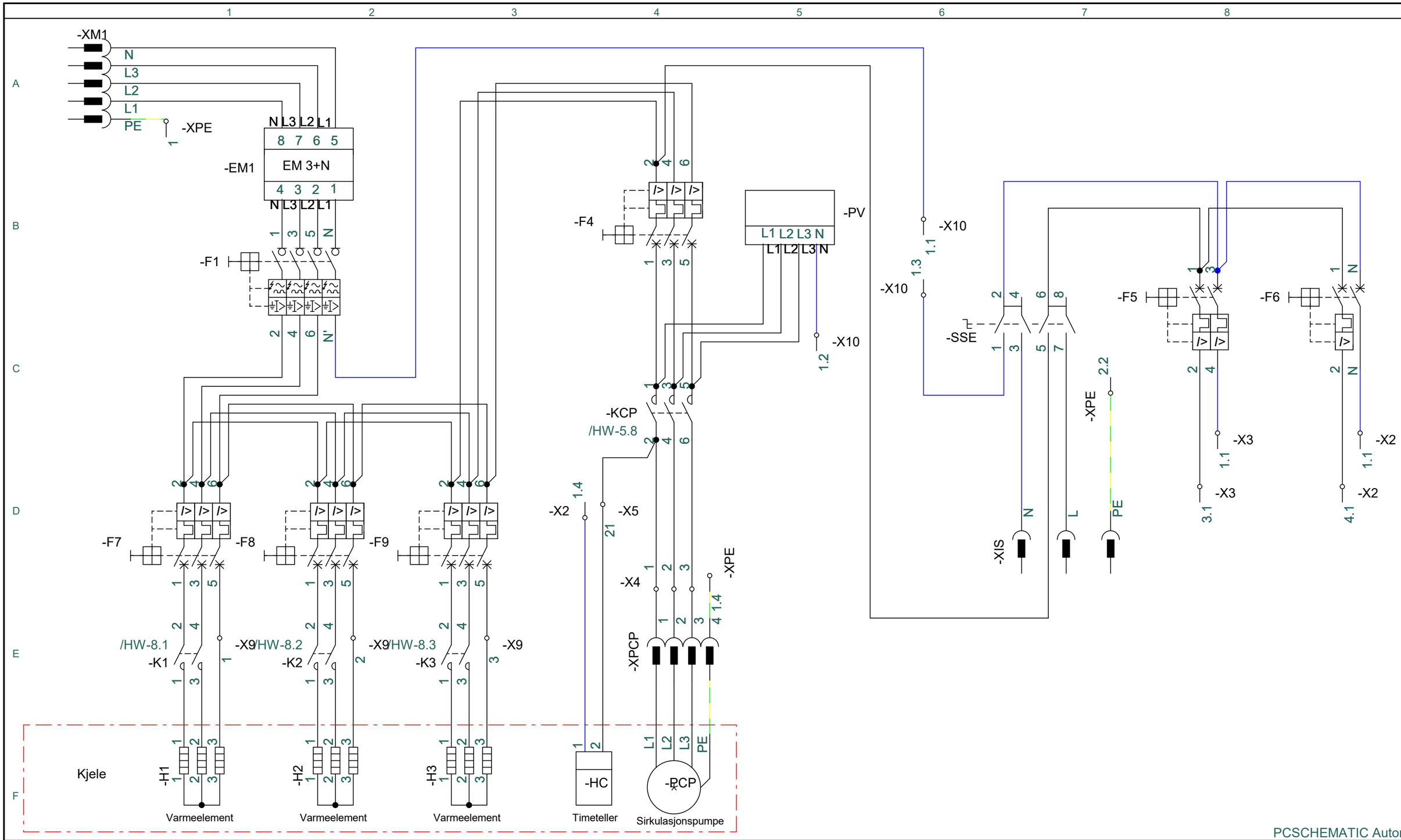

PCSCHEMATIC Automation

Project title:	**HW6000E**	**Project no.:**	**Proto 3**	**Project rev.:**	**Page** **HW-1**
Customer:		DCC:			Scale: 1:1
Page title:	Hovedstrøm XM1 og fordeling styrestrøm	Dwg. no.:		Page rev.:	Previous page:
File name:	El og Hybrid 108kW - Proto 3-rev4	Eng. (proj/page):	WEN	Last print: 20.10.2023	Next page: HW-2
Page ref.:		Appr. (date/init):		Last edit: 17.10.2023	Total no. of pages: 18

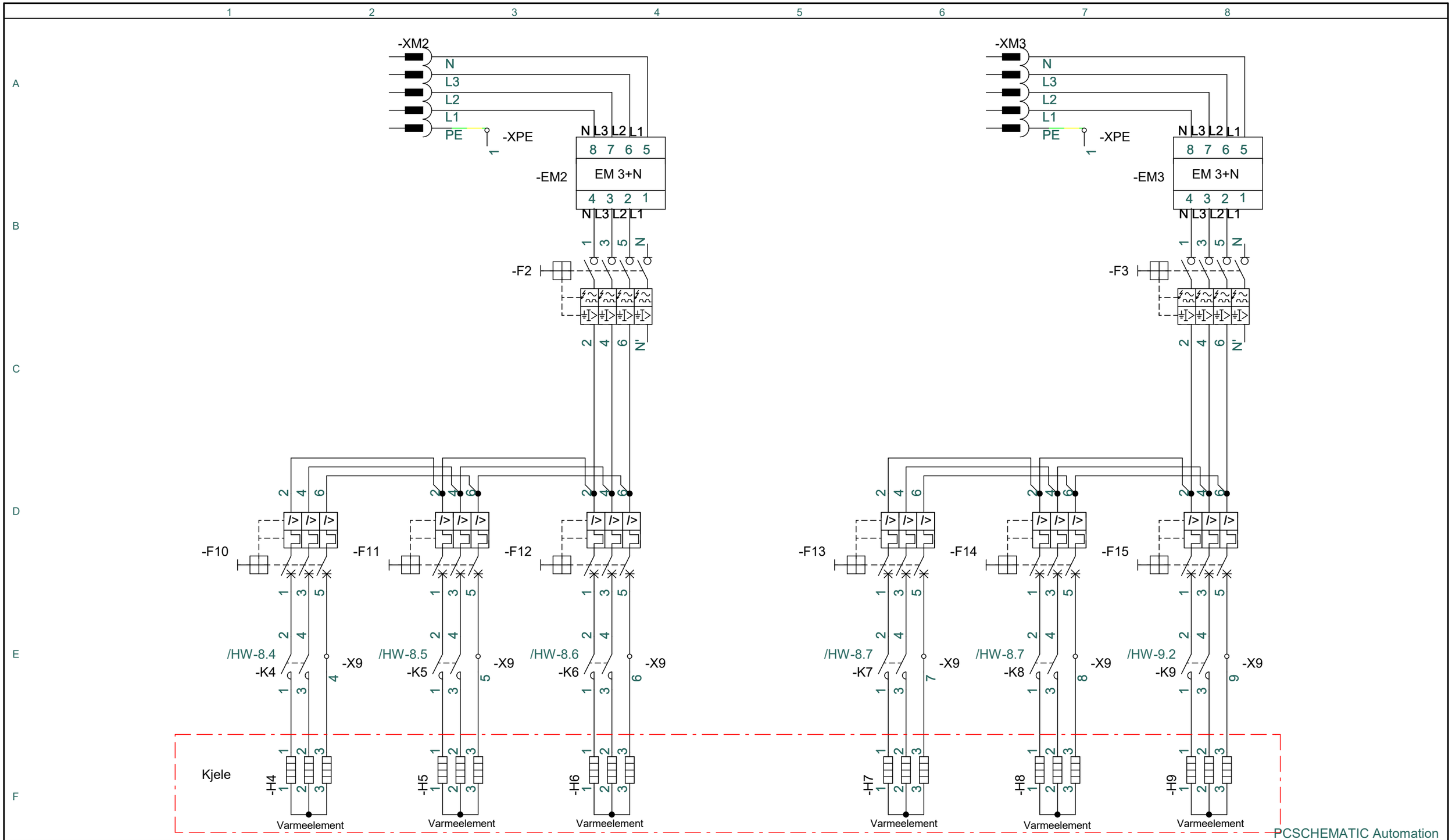

PCSCHEMATIC Automation

Project title:	**HW6000E**	**Project no.:**	**Proto 3**	**Project rev.:**	**Page** **HW-2**
Customer:		DCC:			Scale: 1:1
Page title:	Hovedstrøm XM2 og XM3	Dwg. no.:		Page rev.:	Previous page: HW-1
File name:	EI og Hybrid 108kW - Proto 3-rev4	Eng. (proj/page):	WEN	Last print: 20.10.2023	Next page: HW-3
Page ref.:		Appr. (date/init):		Last edit: 20.09.2023	Total no. of pages: 18

Styrestrømkurs F5
tilhører rekkeklemmer X3

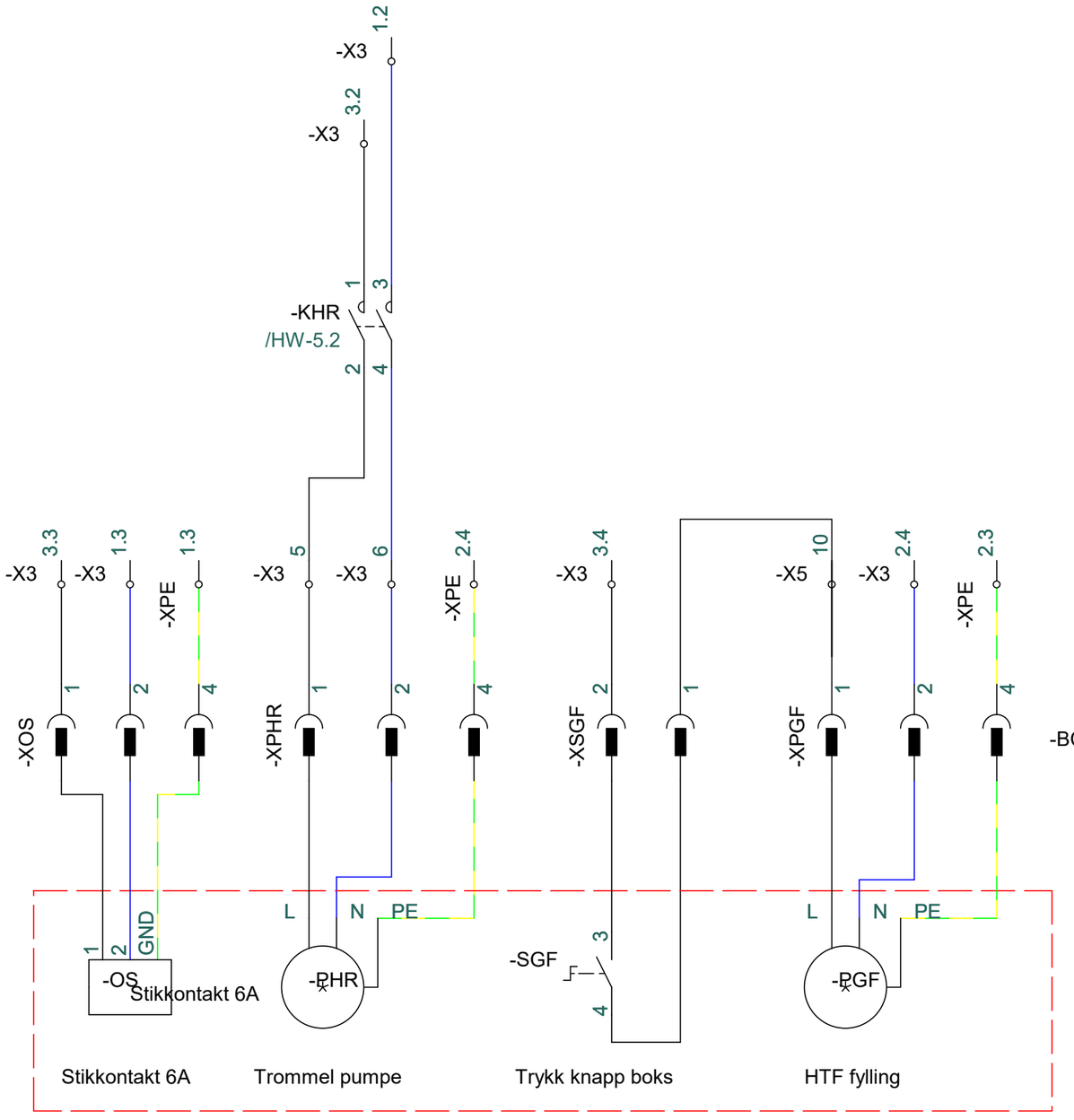

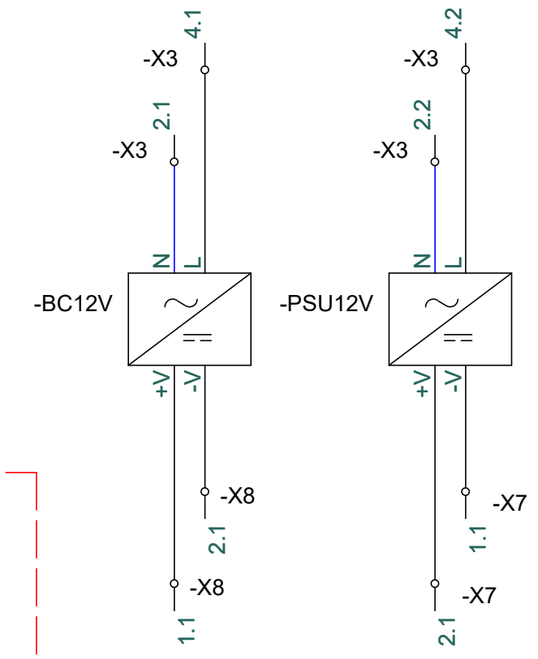

Styrestrømkurs F6
tilhører rekkeklemmer X2

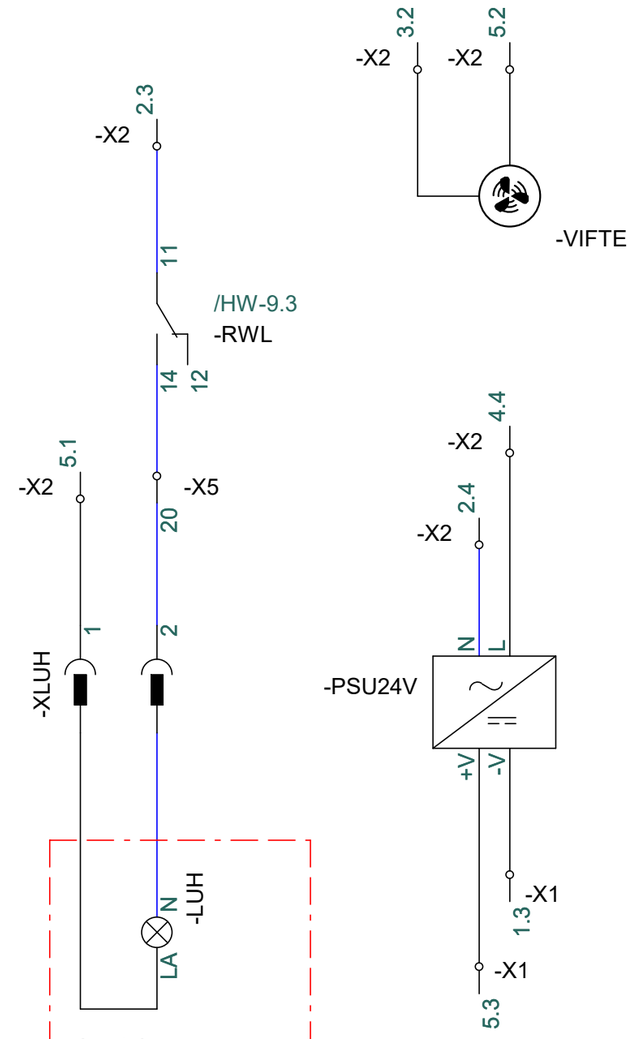

PCSCHEMATIC Automation

Project title:	**HW6000E**	**Project no.:**	**Proto 3**	**Project rev.:**	**Page** **HW-3**
Customer:		DCC:			Scale: 1:1
Page title:	Styrestrøm kurs F5 og F6	Dwg. no.:		Page rev.:	Previous page: HW-2
File name:	El og Hybrid 108kW - Proto 3-rev4	Eng. (proj/page):	WEN	Last print: 20.10.2023	Next page: HW-4
Page ref.:		Appr. (date/init):		Last edit: 17.10.2023	Total no. of pages: 18

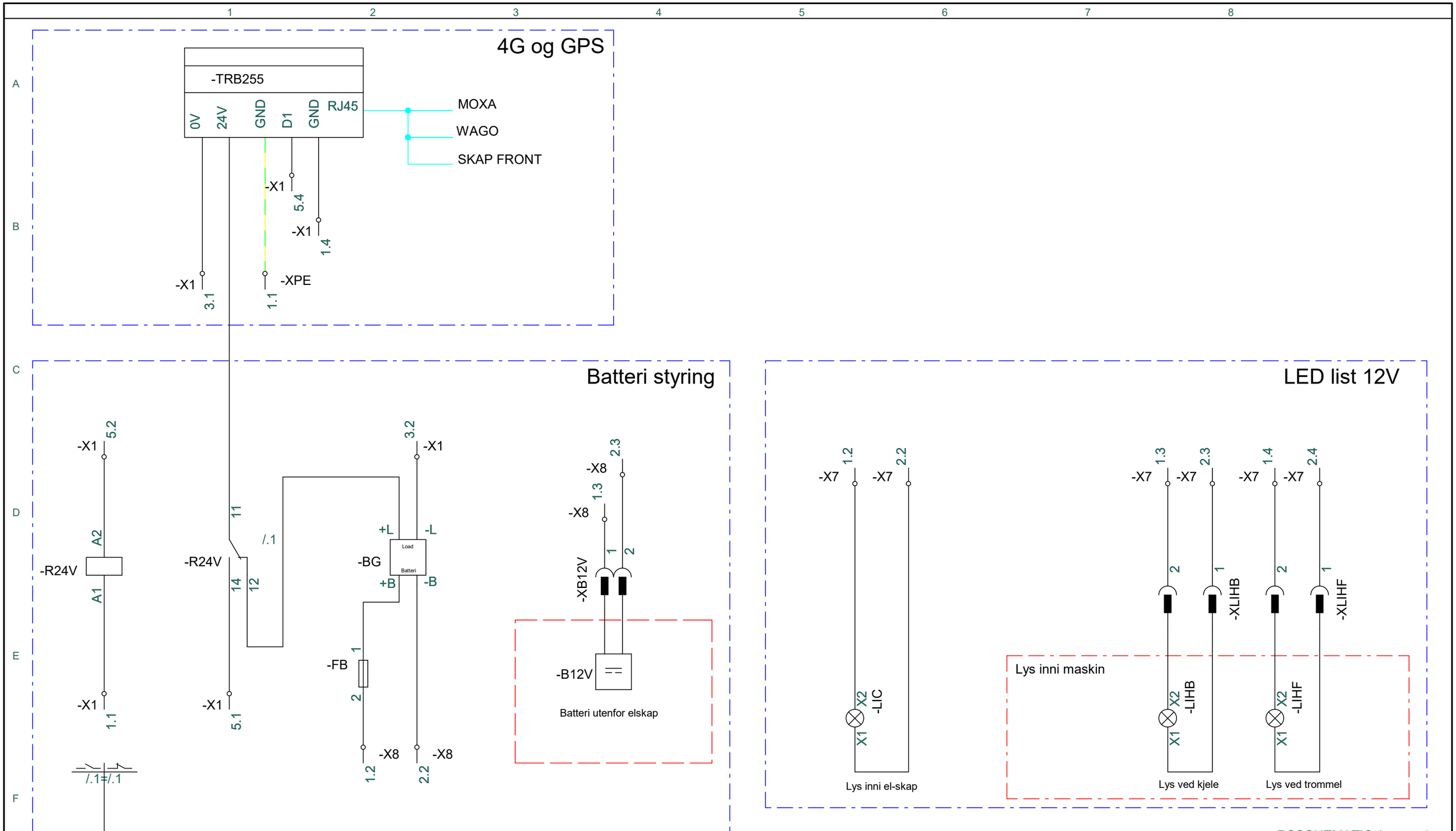

PCSCHEMATIC Automation

Project title:	**HW6000E**	**Project no.:**	**Proto 3**	**Project rev.:**	**Page** **HW-4**
Customer:		DCC:			Scale: 1:1
Page title:	GPS/GSM - Batteri og batterivakt - LED Lys 12V	Dwg. no.:		Page rev.:	Previous page: HW-3
File name:	El og Hybrid 108kW - Proto 3-rev4	Eng. (proj/page):	WEN	Last print: 20.10.2023	Next page: HW-5
Page ref.:		Appr. (date/init):		Last edit: 11.09.2023	Total no. of pages: 18

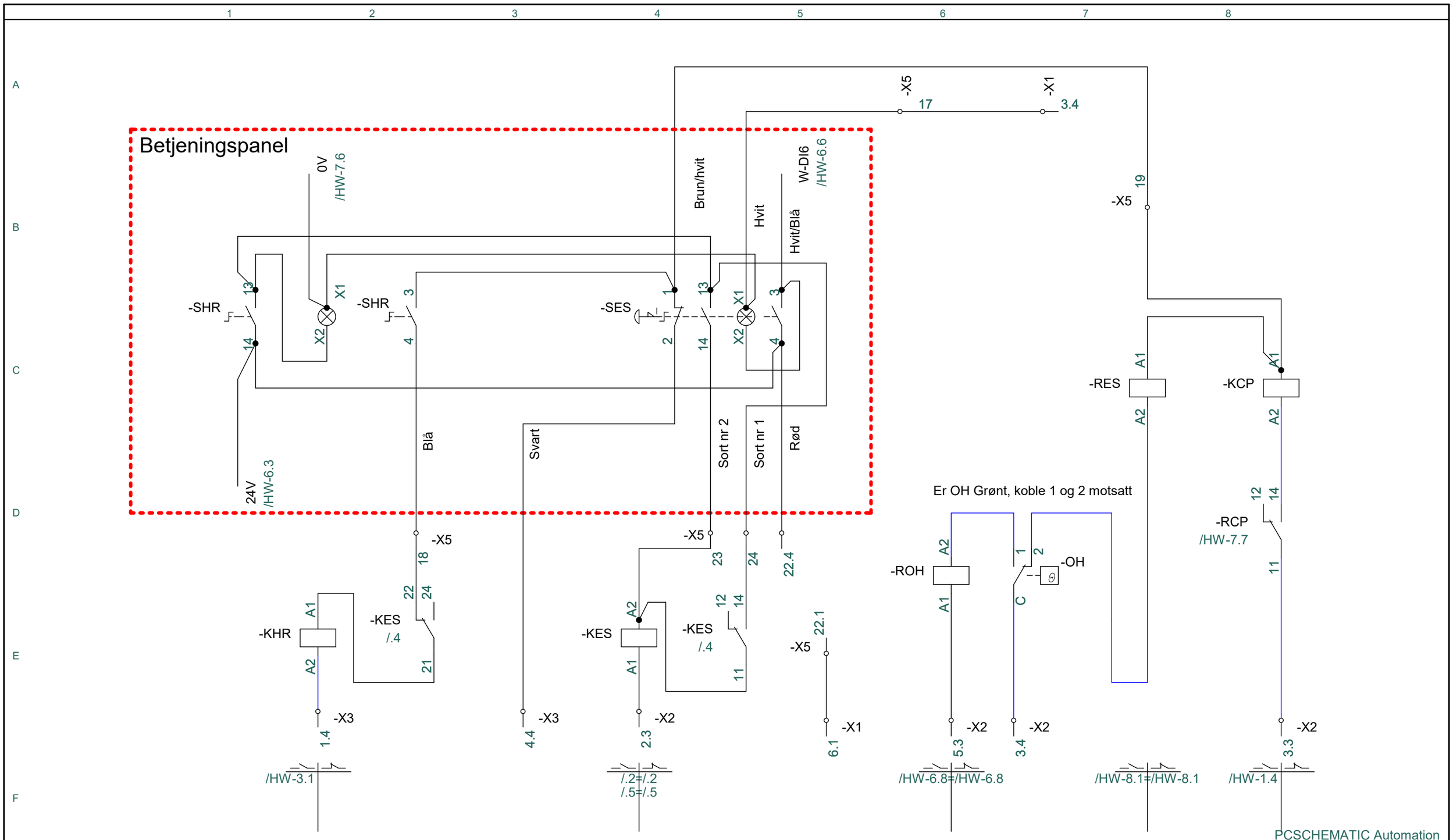

PCSCHEMATIC Automation

Project title:	**HW6000E**	**Project no.:** **Proto 3**	**Project rev.:**	**Page**	**HW-5**
Customer:		DCC:		Scale:	1:1
Page title:	Styring nødstopp, overopphetning og trommel	Dwg. no.:	Page rev.:	Previous page:	HW-4
File name:	El og Hybrid 108kW - Proto 3-rev4	Eng. (proj/page): WEN	Last print: 20.10.2023	Next page:	HW-6
Page ref.:		Appr. (date/init):	Last edit: 17.10.2023	Total no. of pages:	18

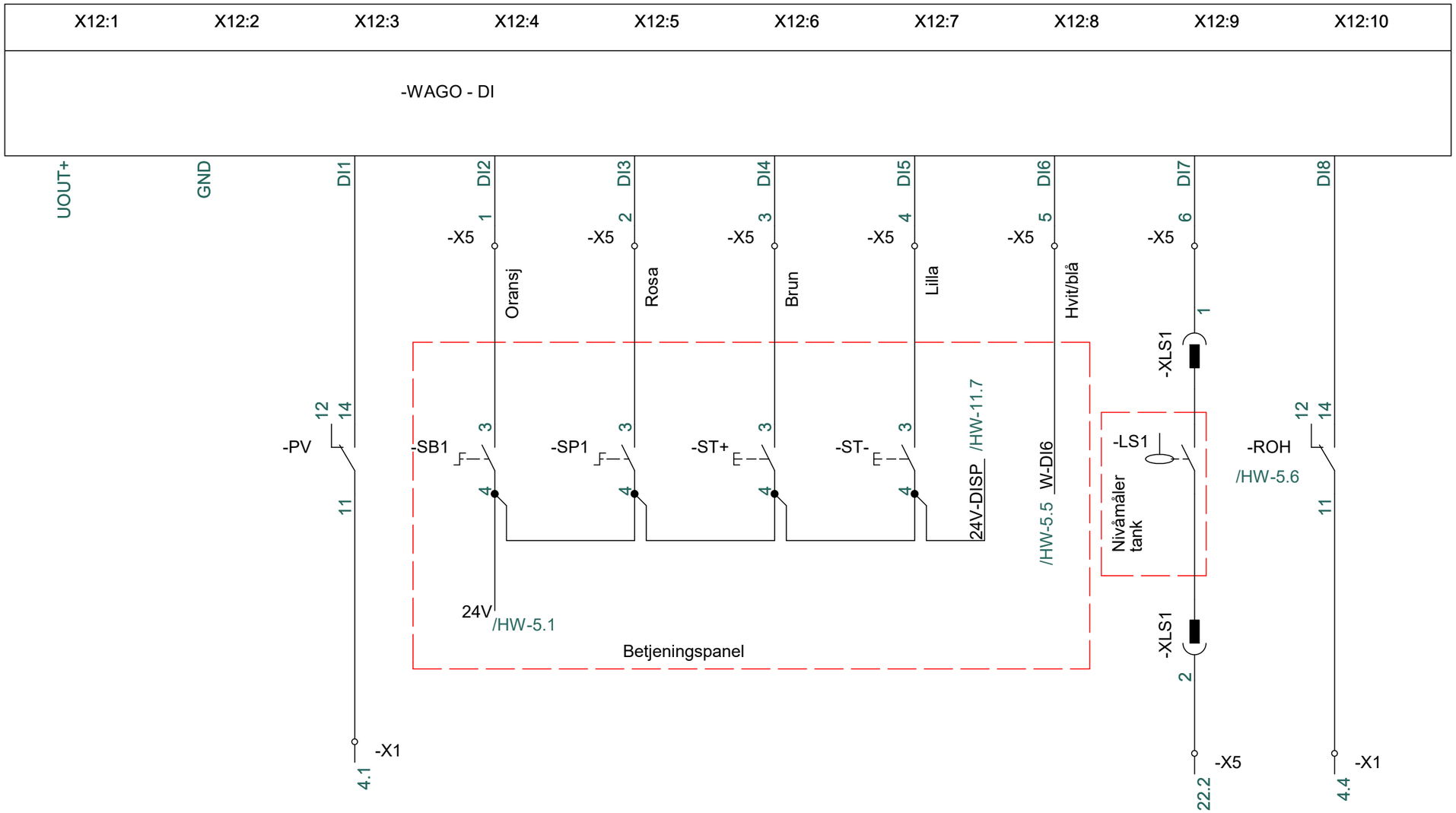

PCSCHEMATIC Automation

Project title:	**HW6000E**	**Project no.:** **Proto 3**	**Project rev.:**	**Page**	**HW-6**
Customer:		DCC:		Scale:	1:1
Page title:	Styrestrøm - PLS Digitale innganger	Dwg. no.:	Page rev.:	Previous page:	HW-5
File name:	El og Hybrid 108kW - Proto 3-rev4	Eng. (proj/page): WEN	Last print: 20.10.2023	Next page:	HW-7
Page ref.:		Appr. (date/init):	Last edit: 17.10.2023	Total no. of pages:	18

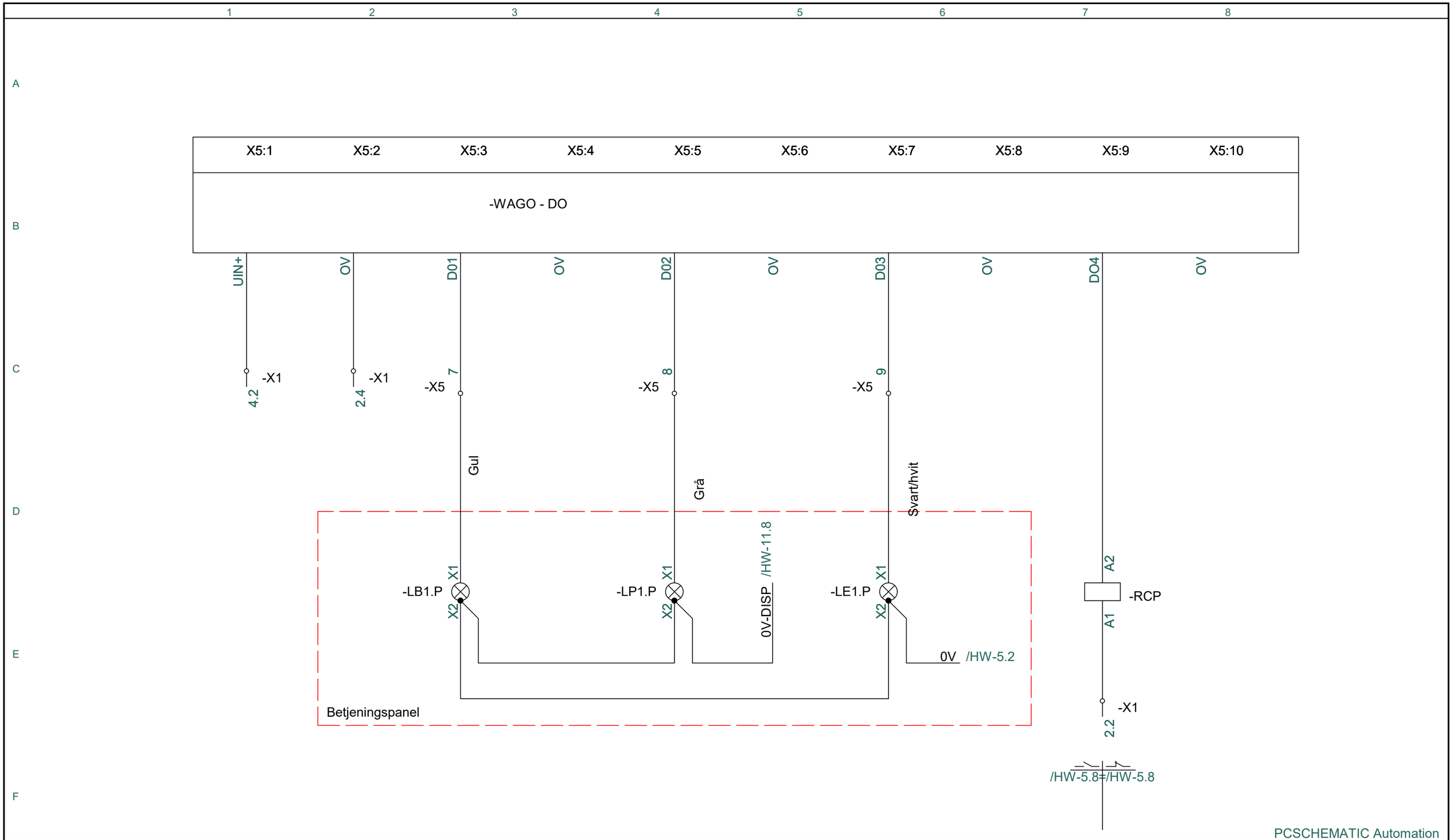

Project title:	**HW6000E**	**Project no.:**	**Proto 3**	**Project rev.:**	**Page** **HW-7**
Customer:		DCC:			Scale: 1:1
Page title:	Styrestrøm - PLS Digitale utganger	Dwg. no.:		Page rev.:	Previous page: HW-6
File name:	El og Hybrid 108kW - Proto 3-rev4	Eng. (proj/page):	WEN	Last print: 20.10.2023	Next page: HW-8
Page ref.:		Appr. (date/init):		Last edit: 17.10.2023	Total no. of pages: 18

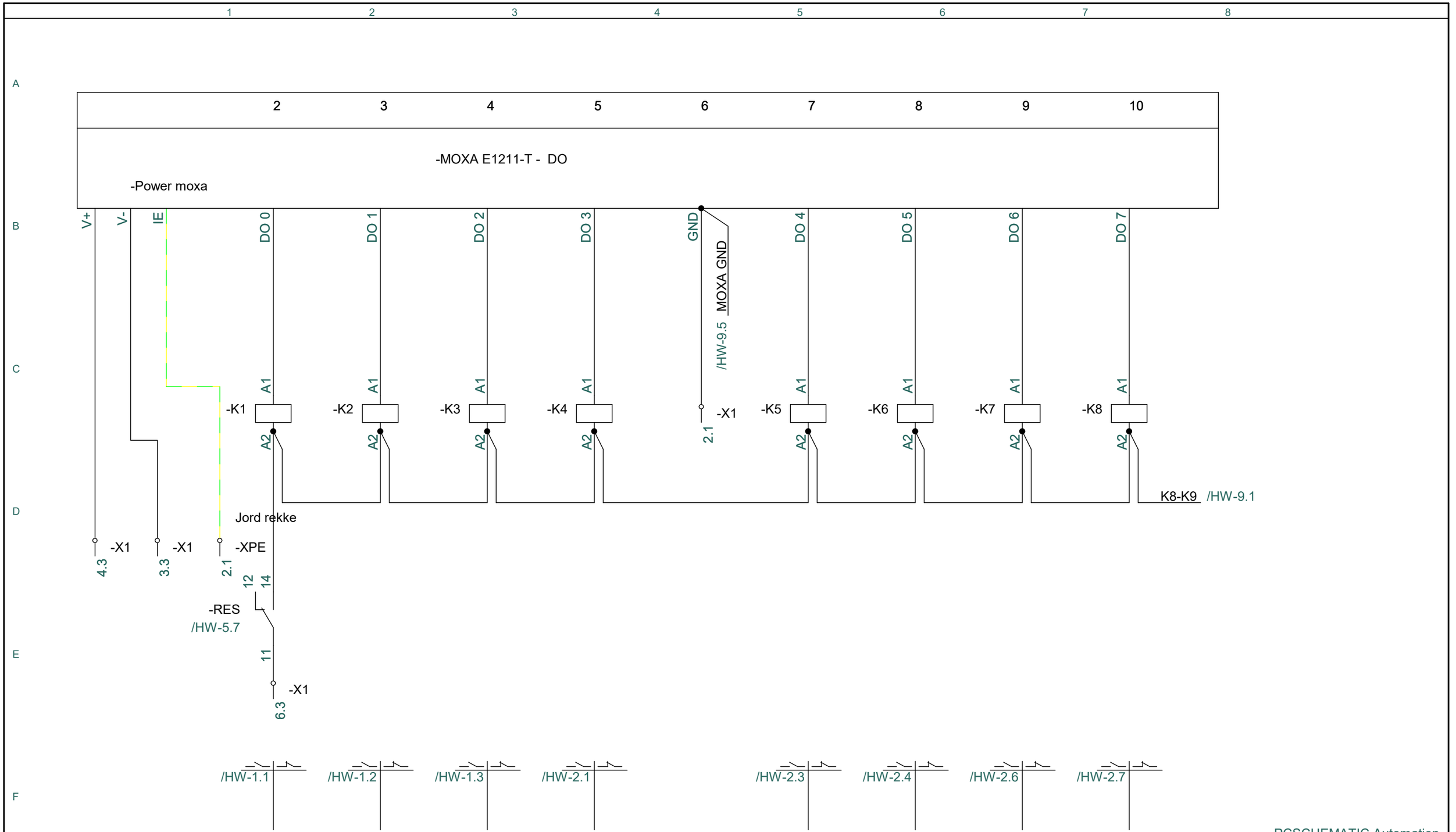

PCSCHEMATIC Automation

Project title:	**HW6000E**	**Project no.:**	**Proto 3**	**Project rev.:**	**Page** **HW-8**
Customer:		DCC:			Scale: 1:1
Page title:	Styrestrøm - Utgangs modul nr1	Dwg. no.:		Page rev.:	Previous page: HW-7
File name:	El og Hybrid 108kW - Proto 3-rev4	Eng. (proj/page):	WEN	Last print: 20.10.2023	Next page: HW-9
Page ref.:		Appr. (date/init):		Last edit: 17.10.2023	Total no. of pages: 18

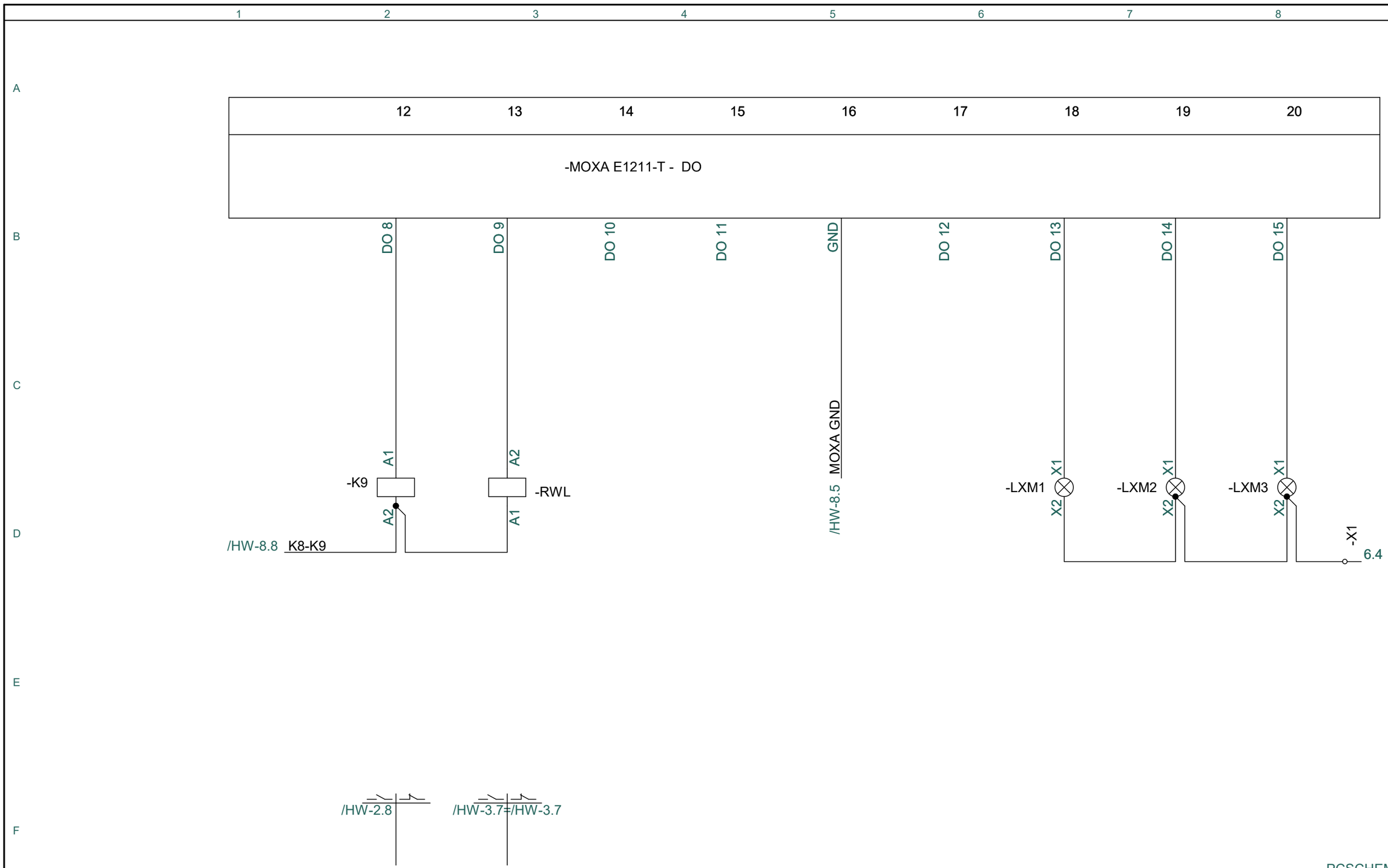

PCSCHEMATIC Automation

Project title:	**HW6000E**	**Project no.:**	**Proto 3**	**Project rev.:**		**Page**	**HW-9**
Customer:		DCC:				Scale:	1:1
Page title:	Styrestrøm - Utgangs modul nr2	Dwg. no.:		Page rev.:		Previous page:	HW-8
File name:	El og Hybrid 108kW - Proto 3-rev4	Eng. (proj/page):	WEN	Last print:	20.10.2023	Next page:	HW-10
Page ref.:		Appr. (date/init):		Last edit:	11.09.2023	Total no. of pages:	18

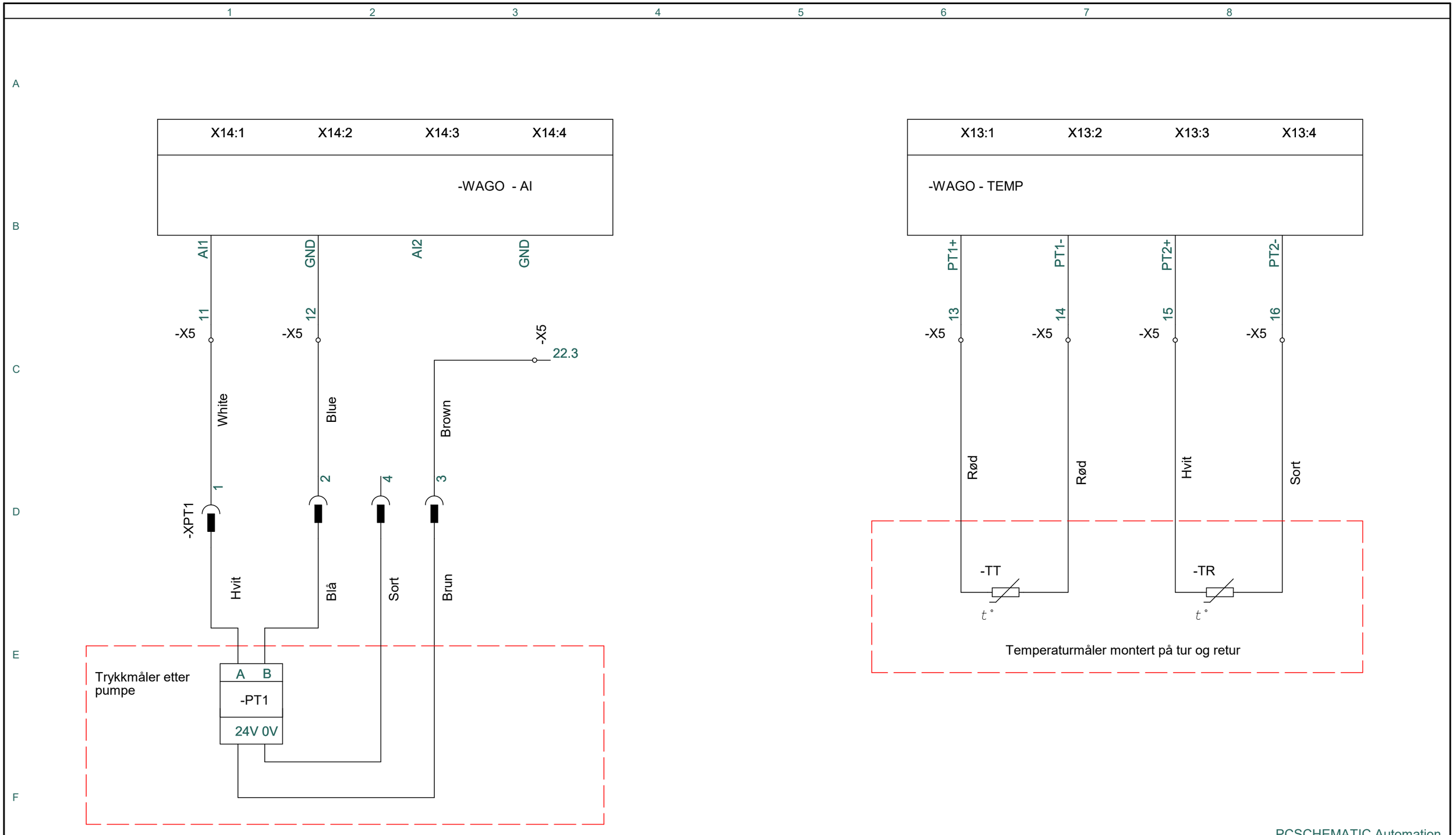

PCSCHEMATIC Automation

Project title:	**HW6000E**	**Project no.:**	**Proto 3**	**Project rev.:**	**Page** **HW-10**
Customer:		DCC:			Scale: 1:1
Page title:	Styrestrøm - Trykk og Temperatur	Dwg. no.:		Page rev.:	Previous page: HW-9
File name:	El og Hybrid 108kW - Proto 3-rev4	Eng. (proj/page):	WEN	Last print: 20.10.2023	Next page: HW-11
Page ref.:		Appr. (date/init):		Last edit: 11.09.2023	Total no. of pages: 18

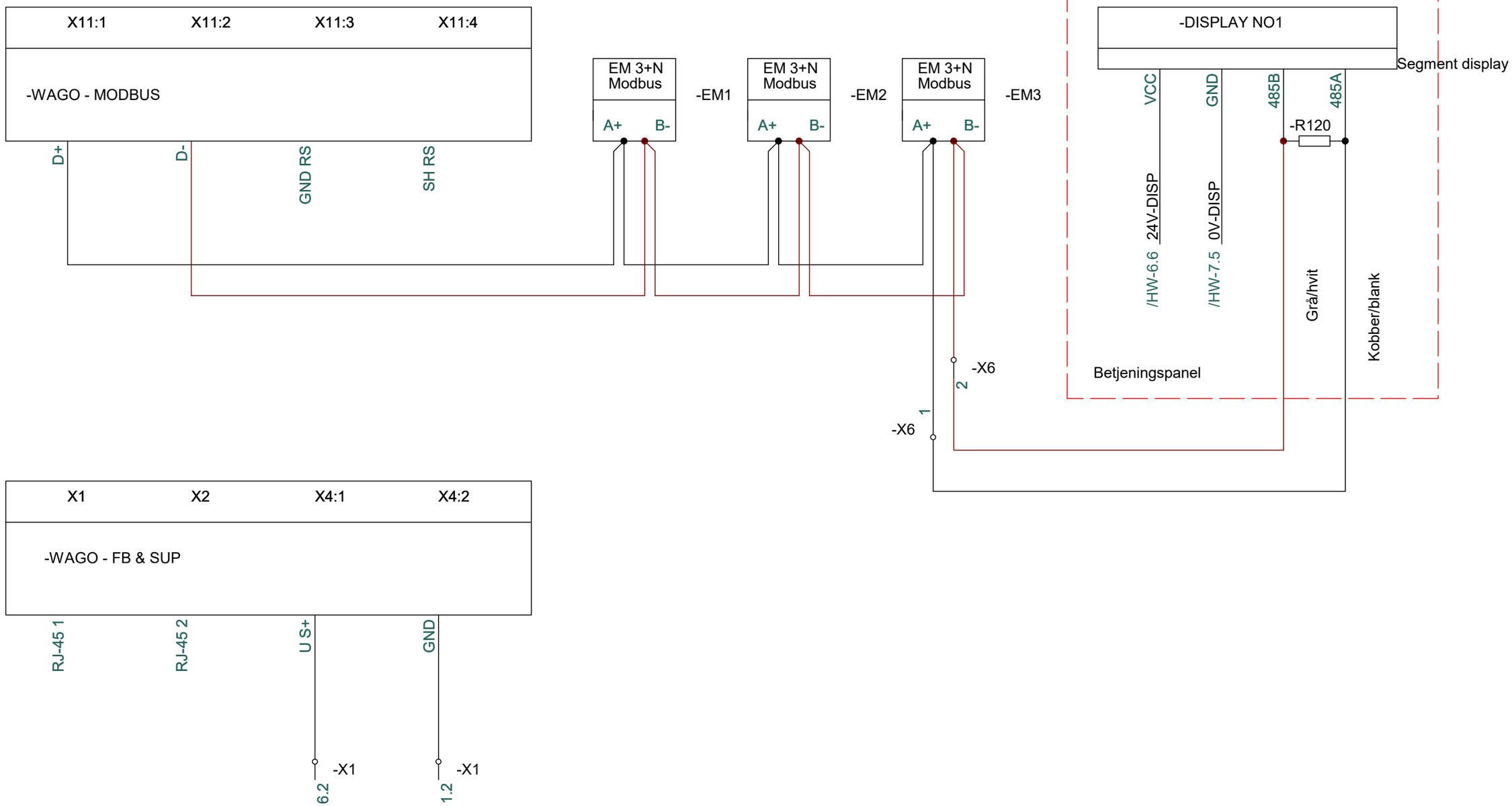

PCSCHEMATIC Automation

Project title:	**HW6000E**	**Project no.:**	**Proto 3**	**Project rev.:**	**Page** **HW-11**
Customer:		DCC:			Scale: 1:1
Page title:	Styrestrøm - Energimåler og strømforsyning PLS	Dwg. no.:		Page rev.:	Previous page: HW-10
File name:	El og Hybrid 108kW - Proto 3-rev4	Eng. (proj/page):	WEN	Last print: 20.10.2023	Next page: HW-A-2
Page ref.:		Appr. (date/init):		Last edit: 11.09.2023	Total no. of pages: 18

Component	Article no.	Type	Function	Description	Manufacturer	Position
-B12V			12V Batteri			/HW-4.4
-BC12V	MXS 5.0 EU	MXS 5.0 EU	Batteri lader	Ctek MXS 5.0	Ctek	/HW-3.5
-BG	M148A	M148A	Batterivakt		Kemo	/HW-4.2
-DISPLAY NO1			Segment display			/HW-11.7
-EM1	SDM630-Modbus V2	EM 3+N	Energimåler nr 1	Three Phase Energy Meter	Eastron	/HW-1.1
-EM2	SDM630-Modbus V2	EM 3+N	Energimåler nr 2	Three Phase Energy Meter	--	/HW-2.4
-EM3	SDM630-Modbus V2	EM 3+N	Energimålernr 3	Three Phase Energy Meter	--	/HW-2.8
-F1	A9Z21463	A9Z21463	63A JB		Schneider Electric	/HW-1.2
-F2	A9Z21463	A9Z21463	63A JB		--	/HW-2.4
-F3	A9Z21463	A9Z21463	63A JB		--	/HW-2.8
-F4	A9F07320	A9F07320	6A 3 fase		--	/HW-1.4
-F5	A9F07210	A9F07210	6A 1fase		--	/HW-1.8
-F6		Lovato	10A 1~ brud			/HW-1.8
-F7	A9F07320	A9F07320	20A 3 fase		Schneider Electric	/HW-1.1
-F8	A9F07320	A9F07320	20A 3 fase		--	/HW-1.2
-F9	A9F07320	A9F07320	20A 3 fase		--	/HW-1.3
-F10	A9F07320	A9F07320	20A 3 fase		--	/HW-2.2
-F11	A9F07320	A9F07320	20A 3 fase		--	/HW-2.3
-F12	A9F07320	A9F07320	20A 3 fase		--	/HW-2.4
-F13	A9F07320	A9F07320	20A 3 fase		--	/HW-2.6
-F14	A9F07320	A9F07320	20A 3 fase		--	/HW-2.7
-F15	A9F07320	A9F07320	20A 3 fase		--	/HW-2.8
-FB			Batteri sikring glass 1A			/HW-4.2
-H1			Varme element 12KW			/HW-1.1
-H2			Varme element 12kW			/HW-1.2
-H3			Varme element 12kW			/HW-1.3
-H4			Varme element 12kW			/HW-2.1
-H5			Varme element 12kW			/HW-2.3

Component	Article no.	Type	Function	Description	Manufacturer	Position
-H6			Varme element 12kW			/HW-2.4
-H7			Varme element 12kW			/HW-2.6
-H8			Varme element 12kW			/HW-2.7
-H9			Varme element 12kW			/HW-2.8
-HC	BW7018-23050	BW7018-23050	Timeteller		HugoMuller	/HW-1.4
-K1	22.32.0.024.4320	22.32.0.024.4320	Kontaktor varmeelement nr 1		Finder	/HW-8.1
-K2	22.32.0.024.4320	22.32.0.024.4320	Kontaktor varmeelement nr 2		--	/HW-8.2
-K3	22.32.0.024.4320	22.32.0.024.4320	Kontaktor varmeelement nr 3		--	/HW-1.3
-K4	22.32.0.024.4320	22.32.0.024.4320	Kontaktor varmeelement nr 4		--	/HW-8.4
-K5	22.32.0.024.4320	22.32.0.024.4320	Kontaktor varmeelement nr 5		--	/HW-8.5
-K6	22.32.0.024.4320	22.32.0.024.4320	Kontaktor varmeelement nr 6		--	/HW-8.6
-K7	22.32.0.024.4320	22.32.0.024.4320	Kontaktor varmeelement nr 7		--	/HW-8.7
-K8	22.32.0.024.4320	22.32.0.024.4320	Kontaktor varmeelement nr 8		--	/HW-8.7
-K9	22.32.0.024.4320	22.32.0.024.4320	Kontaktor varmeelement nr 9		--	/HW-9.2
-KCP	K3-18ND01-230V	K3-18ND01-230V	Kontaktor sirkulasjonspumpe		Benedict	/HW-5.8
-KHR	A9C20732	A9C20732	Kontaktor trommel pumpe		Schneider electric	/HW-5.2
-LB1.P	XB4BW33B5	XB4BW33B5	Lys for aktivering av varme på kjele		Schneider Electric	/HW-7.3
-LE1.P	XB4BW33B5	XB4BW33B5	Lys for feil (Error)		--	/HW-7.6
-LHR	XB4BVB4	XB4BVB4	Lys for trommel drift		--	/HW-5.2
-LIC	XB4BVB4	XB4BVB4	Lys inni elskapet		--	/HW-4.5
-LIHB	XB4BVB4	XB4BVB4	Lys ved kjele		--	/HW-4.8
-LIHF	XB4BVB4	XB4BVB4	Lys ved trommel		--	/HW-4.8
-LP1.P	XB4BW33B5	XB4BW33B5	Lys for kjøring av sirkulasjonspumpe		--	/HW-7.4
-LS1			Nivåmåler buffertank			/HW-6.7
-LUH	XB4BVB4	XB4BVB4			Schneider Electric	/HW-3.7
-LXM1	XB4BVB4	XB4BVB4	Bekreftelses lys for XM1 tilkoblet		--	/HW-9.7
-LXM2	XB4BVB4	XB4BVB4	Bekreftelses lys for XM2 tilkoblet		--	/HW-9.7
-LXM3	XB4BVB4	XB4BVB4	Bekreftelses lys for XM3 tilkoblet		--	/HW-9.8

Component	Article no.	Type	Function	Description	Manufacturer	Position
-MOXA E1211-T - DO	E1211	iOLogik E1211	Digital utgangsmodul		Moxa	/HW-8.1
-OH			Overopphetningsvern			/HW-5.6
-OS			Stikkontakt 6A			/HW-3.1
-PCP			Sirkulasjonspumpe 3~			/HW-1.4
-PGF			Pumpe for HTF			/HW-3.3
-PHR			Pumpe for trommel			/HW-3.1
-PSU12V	LPV-60	LPV-60	Strømforsyning LED lys		Mean Well	/HW-3.6
-PSU24V	HDR-24-30	HDR-24	Strømforsyning 24V		--	/HW-3.8
-PT1			Trykk transmitter			/HW-10.1
-PV	GRV8-03	GRV8-03	Fasevakt 3~	Fasevakt 3~	Geya	/HW-1.5
-R24V	857-359	857-359	Rele for 12v/24V tilførsel GPS		Wago	/HW-4.1
-R120			120Ohms motstand på modbus signalet			/HW-11.8
-RCP	857-359	857-359	Rele til sirkulasjonspumpe		Wago	/HW-7.7
-RES	857-359	857-359	Rele nødstopp styring		--	/HW-5.7
-ROH	857-359	857-359	Rele overopphetningsvern		--	/HW-5.6
-RWL	857-359	857-359	Rele for varsellys tak		--	/HW-9.3
-SB1			Boiler start			/HW-6.3
-SES			Nødstopp bryter med lys			/HW-5.4
-SGF			Bryter for fylling av HTF			/HW-3.2
-SHR			Bryter for trommel pumpe			/HW-5.1
-SP1			Sirkulasjons pumpe start			/HW-6.4
-SSE			Service vendebryter			/HW-1.7
-ST+			Justering av temperatur opp			/HW-6.5
-ST-			Justering av temperatur ned			/HW-6.6
-TR			Retur temperatur			/HW-10.8
-TRB255	TRB255	TRB255	4G/GPS modul	TRB255	Teltonika	/HW-4.1
-TT			Tur temperatur			/HW-10.6
-VIFTE			Skap vifte Elskap			/HW-3.8

Component	Article no.	Type	Function	Description	Manufacturer	Position
-WAGO - AI			Analog inngangsmpdul			/HW-10.1
-WAGO - DI			Digital inngangsmodul			/HW-6.1
-WAGO - DO			PLS utgangsmodul			/HW-7.1
-WAGO - FB & SUP			Strømforsyning PLS og ethernett tilkobling			/HW-11.1
-WAGO - MODBUS			Kommunikasjon med modbus			/HW-11.1
-WAGO - TEMP			temperatur modul			/HW-10.6
-X1		2202-1401	Rekkeklemme for styrestrøm F6			/HW-11.3
-X2	2202-1401	2202-1401	Rekkeklemme for styrestrøm F6		Wago	/HW-5.6
-X3	2202-1201	2202-1201	Rekkeklemme for styrestrøm F5		--	/HW-3.1
-X4	2202-1201	2202-1201	Rekkeklemme for sirkulasjonspumpe		--	/HW-1.4
-X5	2202-1201	2202-1201	Rekkeklemme for styresystem		--	/HW-10.8
-X6	2202-1201	2202-1201	Rekkeklemme for modbus		--	/HW-11.6
-X7	2202-1401	2202-1401	Rekkeklemme for LED lys		--	/HW-4.5
-X8	2202-1401	2202-1401	Rekkeklemme for batteri styring		--	/HW-4.2
-X9	2202-1201	2202-1201	Rekkeklemme for kontaktorer til varmelementer		--	/HW-2.8
-X10	2202-1201	2202-1201	Rekkeklemme fordeling N leder styrestrøm		--	/HW-1.6
-XB12V			Hirshmanplugg til batteri			/HW-4.4
-XGF			Hirshmanplugg HTF pumpe			/HW-3.4
-XHR			Hirshmanplugg til trommel pumpe			/HW-3.2
-XIS			Apparatinntak service 16A			/HW-1.7
-XLIHB			Hirshmanplugg til lys ved kjelen			/HW-4.8
-XLIHF			Hirshmanplugg til lys ved betjeningspanel			/HW-4.8
-XLS1			Hirshmanplugg til nivå HTF buffertank			/HW-6.7
-XLUH			Hirshmanplugg Lys til varsel lys HUV			/HW-3.7
-XM1			Apparatinntak 63A - Nr 1			/HW-1.1
-XM2			Apparatinntak 63A - Nr 2			/HW-2.2
-XM3			Apparatinntak 63A - Nr 3			/HW-2.7
-XOS			Hirshmanplugg til stikkontakt 6A			/HW-3.1

Component	Article no.	Type	Function	Description	Manufacturer	Position
-XPCP			Hirshmanplugg sirkulasjonspumpe			/HW-1.4
-XPE			Jord rekke			/HW-8.1
-XPT1			Hirshmanplugg trykksensor			/HW-10.1
-XSGF			Hirshmanplugg Bryter HTF fylling			/HW-3.2

PCSCHEMATIC Automation

Project title:	**HW6000E**	**Project no.:**	**Proto 3**	**Project rev.:**	**Page** **HW-A-6**
Customer:		DCC:			Scale: 1:1
Page title:	Components list	Dwg. no.:		Page rev.:	Previous page: HW-A-5
File name:	EI og Hybrid 108kW - Proto 3-rev4	Eng. (proj/page):	WEN	Last print: 20.10.2023	Next page: HW-A-8
Page ref.:		Appr. (date/init):		Last edit: 11.09.2023	Total no. of pages: 18

Article no.	Type	Manufacturer	Quantity
K3-18ND01-230V	K3-18ND01-230V	Benedict	1
MXS 5.0 EU	MXS 5.0 EU	Ctek	1
SDM630-Modbus V2	EM 3+N	Eastron	3
22.32.0.024.4320	22.32.0.024.4320	Finder	9
GRV8-03	GRV8-03	Geya	1
BW7018-23050	BW7018-23050	HugoMuller	1
M148A	M148A	Kemo	1
HDR-24-30	HDR-24	Mean Well	1
LPV-60	LPV-60	--	1
E1211	iOLogik E1211	Moxa	1
A9C20732	A9C20732	Schneider electric	2
A9F07210	A9F07210	Schneider Electric	1
A9F07320	A9F07320	--	10
A9Z21463	A9Z21463	--	3
XB4BVB4	XB4BVB4	--	8
XB4BW33B5	XB4BW33B5	--	3
TRB255	TRB255	Teltonika	1

Article no.	Type	Manufacturer	Quantity
857-359	857-359	Wago	5
2202-1201	2202-1201	--	39
2202-1401	2202-1401	--	38
			109

Component	Position	Type	Function

PCSCHEMATIC Automation

Project title:	**HW6000E**	**Project no.:**	**Proto 3**	**Project rev.:**		**Page**	**HW-A-1**
Customer:		DCC:				Scale:	1:4
Page title:	Arrangement - A3 - 1:4 - CompList	Dwg. no.:		Page rev.:		Previous page:	HW-A-8
File name:	El og Hybrid 108kW - Proto 3-rev4	Eng. (proj/page):	WEN	Last print:	20.10.2023	Next page:	
Page ref.:		Appr. (date/init):		Last edit:	11.09.2023	Total no. of pages:	18