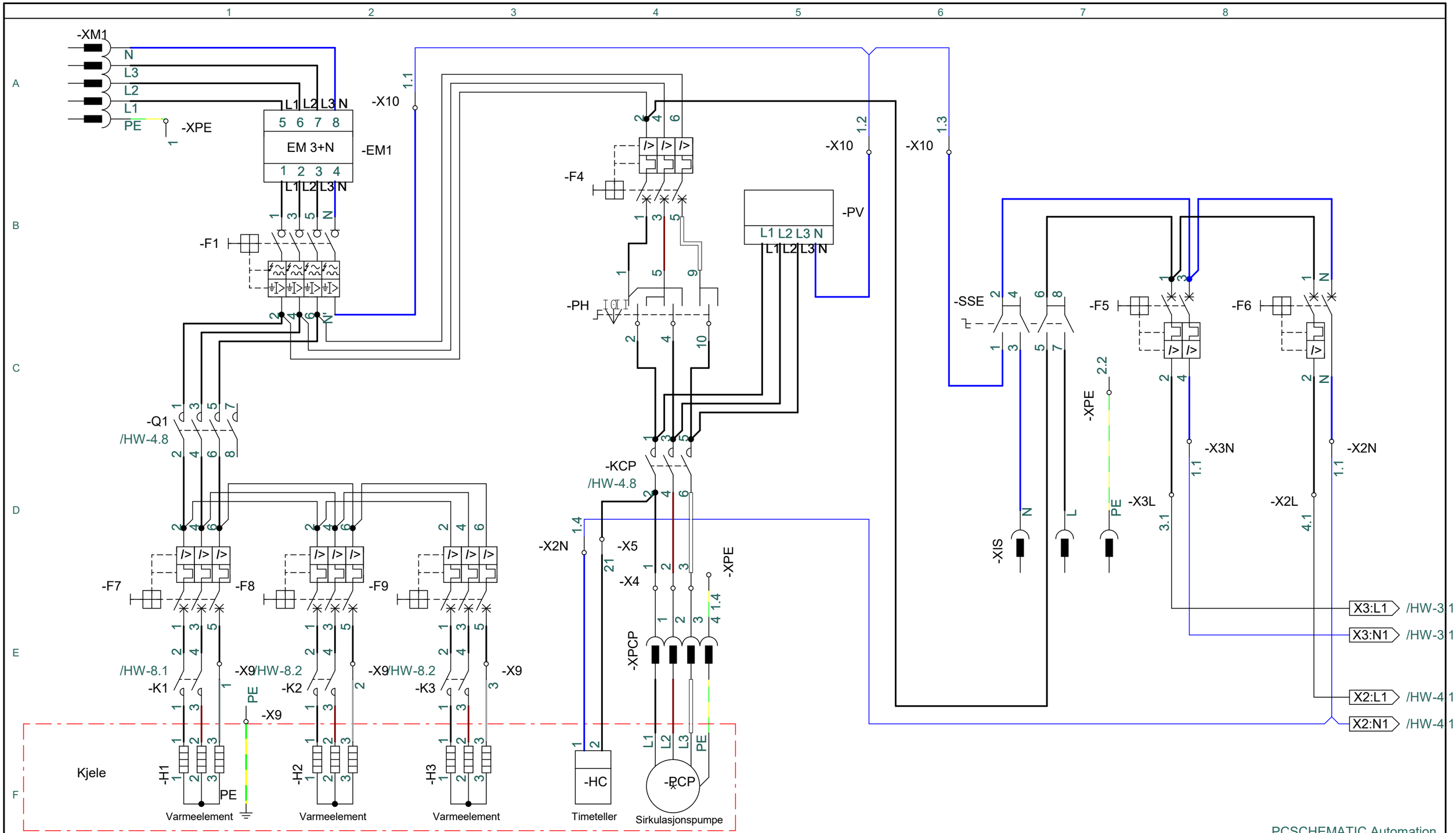

PCSCHEMATIC Automation

Project title:	**HW6000E**	**Project no.:**	**Rev 7**	**Project rev.:**	**Page** **HW-1**
Customer:		DCC:			Scale: 1:1
Page title:	Hovedstrøm XM1 og fordeling styrestrøm	Dwg. no.:		Page rev.:	Previous page:
File name:	EL-maskin 108kW - rev8	Eng. (proj/page):	WEN	Last print: 10.04.2026	Next page: HW-2
Page ref.:		Appr. (date/init):		Last edit: 10.04.2026	Total no. of pages: 13

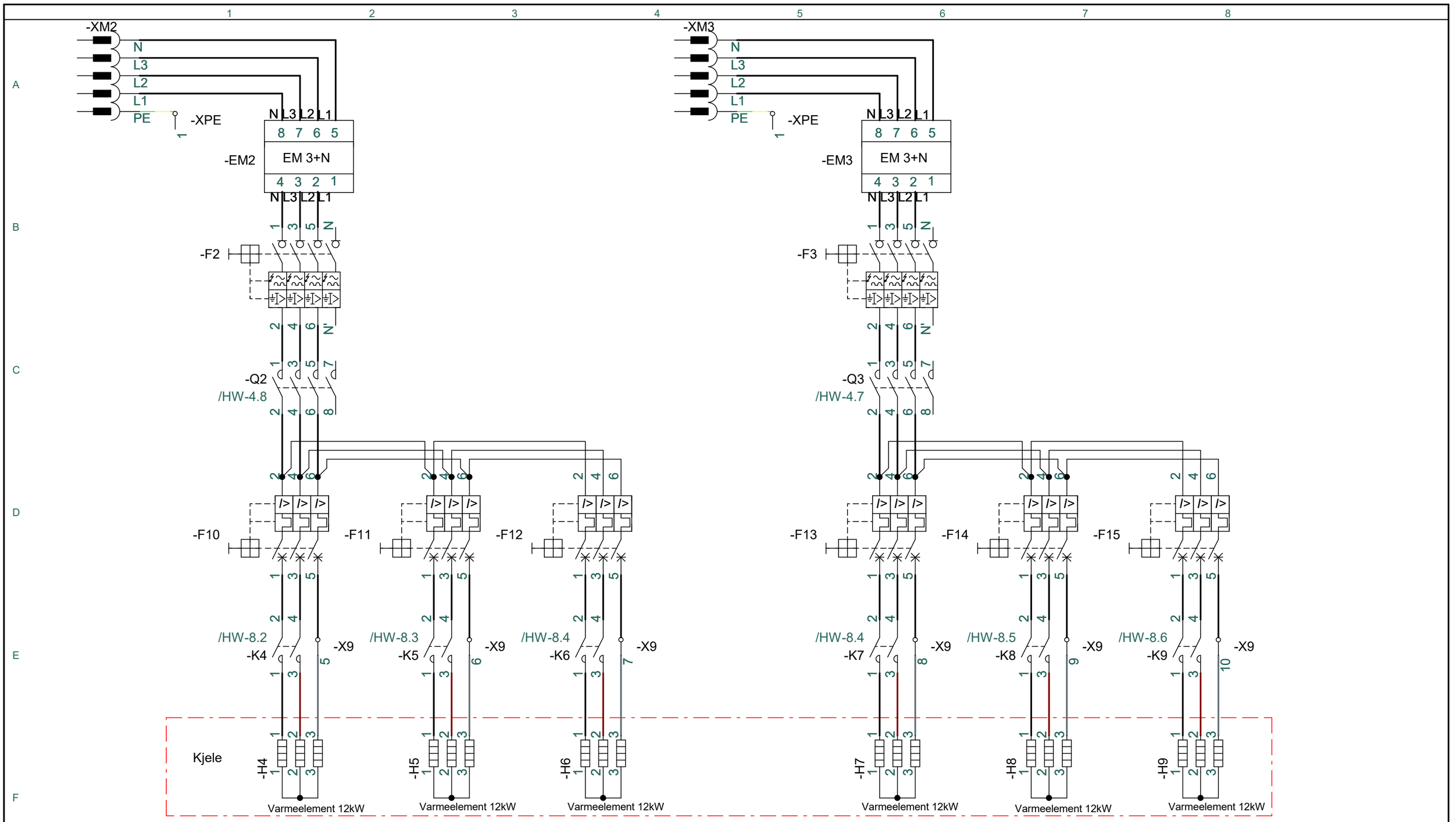

PCSCHEMATIC Automation

Project title:	**HW6000E**	**Project no.:**	**Rev 7**	**Project rev.:**	**Page** **HW-2**
Customer:		DCC:			Scale: 1:1
Page title:	Hovedstrøm XM2 og XM3	Dwg. no.:		Page rev.:	Previous page: HW-1
File name:	EL-maskin 108kW - rev8	Eng. (proj/page):	WEN	Last print: 10.04.2026	Next page: HW-3
Page ref.:		Appr. (date/init):		Last edit: 23.03.2026	Total no. of pages: 13

Styrestrømkurs til automatsikring F5
tilhører rekkeklemmer X3

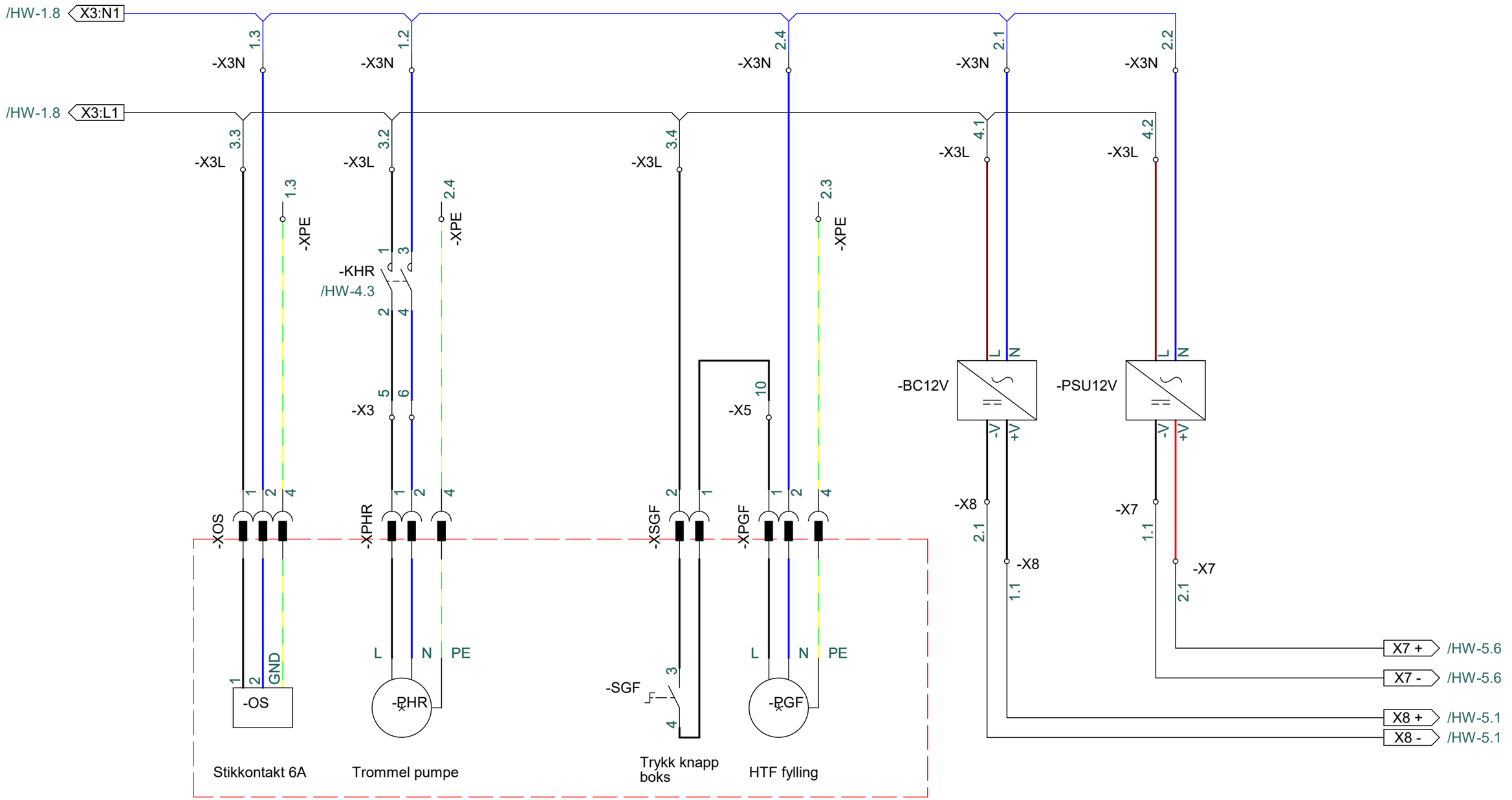

PCSCHEMATIC Automation

Project title:	**HW6000E**	**Project no.:**	**Rev 7**	**Project rev.:**	**Page** **HW-3**
Customer:		DCC:			Scale: 1:1
Page title:	Styrestrøm kurs F5 og F6	Dwg. no.:		Page rev.:	Previous page: HW-2
File name:	EL-maskin 108kW - rev8	Eng. (proj/page):	WEN	Last print: 10.04.2026	Next page: HW-4
Page ref.:		Appr. (date/init):		Last edit: 04.11.2025	Total no. of pages: 13

Styrestrømkurs til automat F6 tilhører rekkeklemmer X2

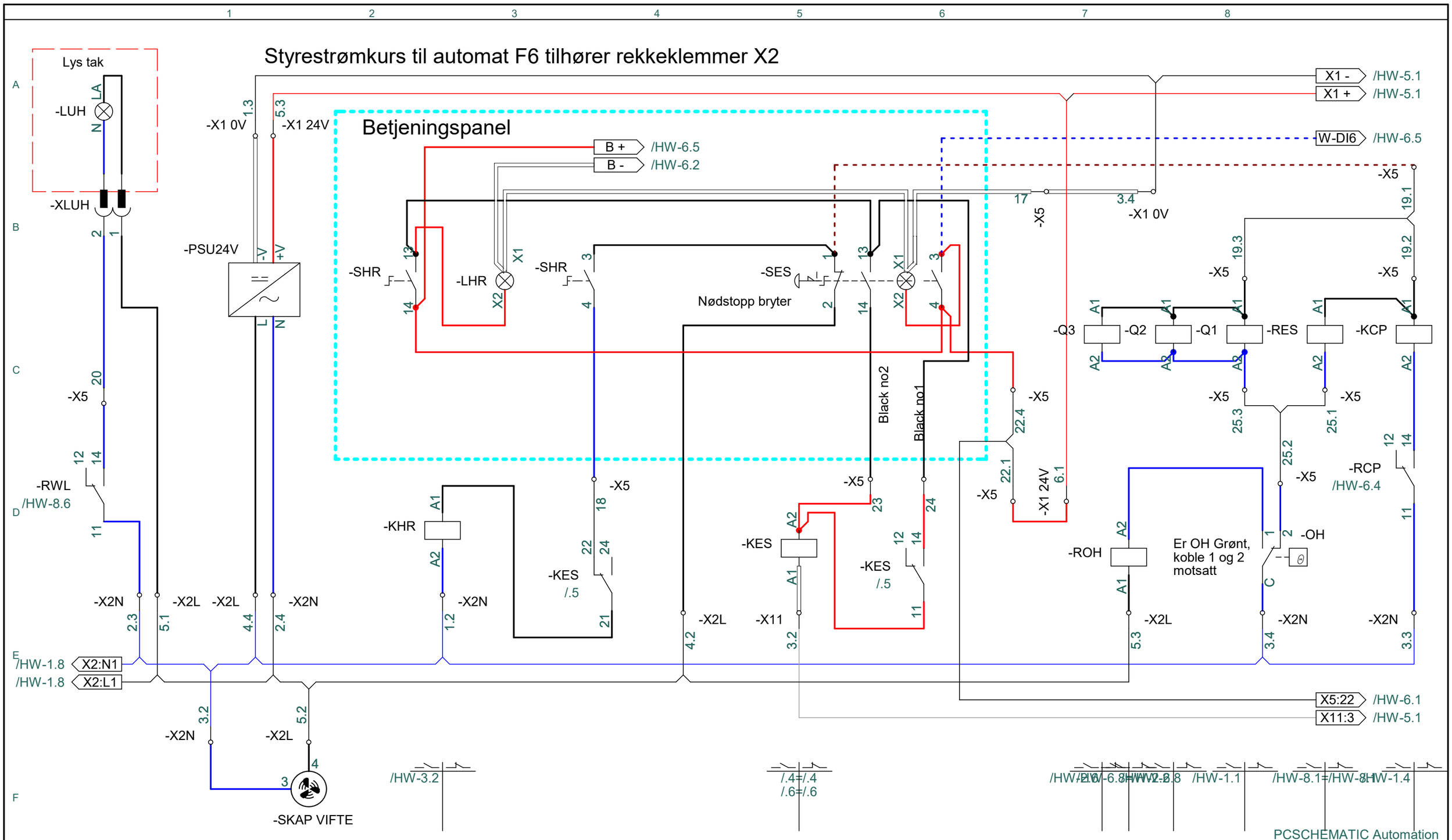

PCSCHEMATIC Automation

Project title:	**HW6000E**	**Project no.:**	**Rev 7**	**Project rev.:**	**Page** **HW-4**
Customer:		DCC:			Scale: 1:1
Page title:	Styrestrøm kurs F5 og F6	Dwg. no.:		Page rev.:	Previous page: HW-3
File name:	EL-maskin 108kW - rev8	Eng. (proj/page):	WEN	Last print: 10.04.2026	Next page: HW-5
Page ref.:		Appr. (date/init):		Last edit: 23.03.2026	Total no. of pages: 13

4G og GPS

-TRB255

0V 24V GND D1 GND RJ45

MOXA
WAGO
SKAP FRONT

-X1 0V 3.1
-X11 1.1
-XPE 1.1
-X1 24V 5.4
-X1 0V 1.4

Track Unit Tillvalg

-X11 1.4
-XTU 1
3.4 2
2.4 4

-X1 0V 2.3
-X11 3.1

0V 12/24V
-TU
Burner Pump

/HW-4.8 X11:3
/HW-3.8 X8 +
/HW-3.8 X8 -
/HW-4.8 X1 +
/HW-4.8 X1 -

X11:2 /HW-6.1
X1 +. /HW-6.1
X1 -. /HW-6.1

Batteri styring

-X1 0V 1.1
-X1 24V 5.2
5.1
-X11 1.2
-X1 0V 3.2
-X8 2.2 1.2
-X8 1.3 2.3

A2
-R24V
A1

11
/.1
14 12
/.2=/.2

+L -L
Load
-BG
Batteri
+B -B
1.1
1.2
-FB
2.2
2.1

-XB12V 1 2
-B12V
Batteri utenfor elskap

LED list 12V

/HW-3.8 X7 +
/HW-3.8 X7 -

-X7 1.2 -X7 2.2
-X7 1.3 -X7 2.3
-X7 1.4 -X7 2.4

X2 -LIC X1
Lys inni el-skap

Lys inni maskin

2 1 -XLIHF
X2 -LIHF X1
Lys ved kjele

2 1 -XLIHB
X2 -LIHB X1
Lys ved trommel

PCSCHEMATIC Automation

Project title:	**HW6000E**	**Project no.:**	**Rev 7**	**Project rev.:**	**Page** **HW-5**
Customer:		DCC:			Scale: 1:1
Page title:	GPS/GSM - Batteri og batterivakt - LED Lys 12V	Dwg. no.:		Page rev.:	Previous page: HW-4
File name:	EL-maskin 108kW - rev8	Eng. (proj/page):	WEN	Last print: 10.04.2026	Next page: HW-6
Page ref.:		Appr. (date/init):		Last edit: 10.04.2026	Total no. of pages: 13

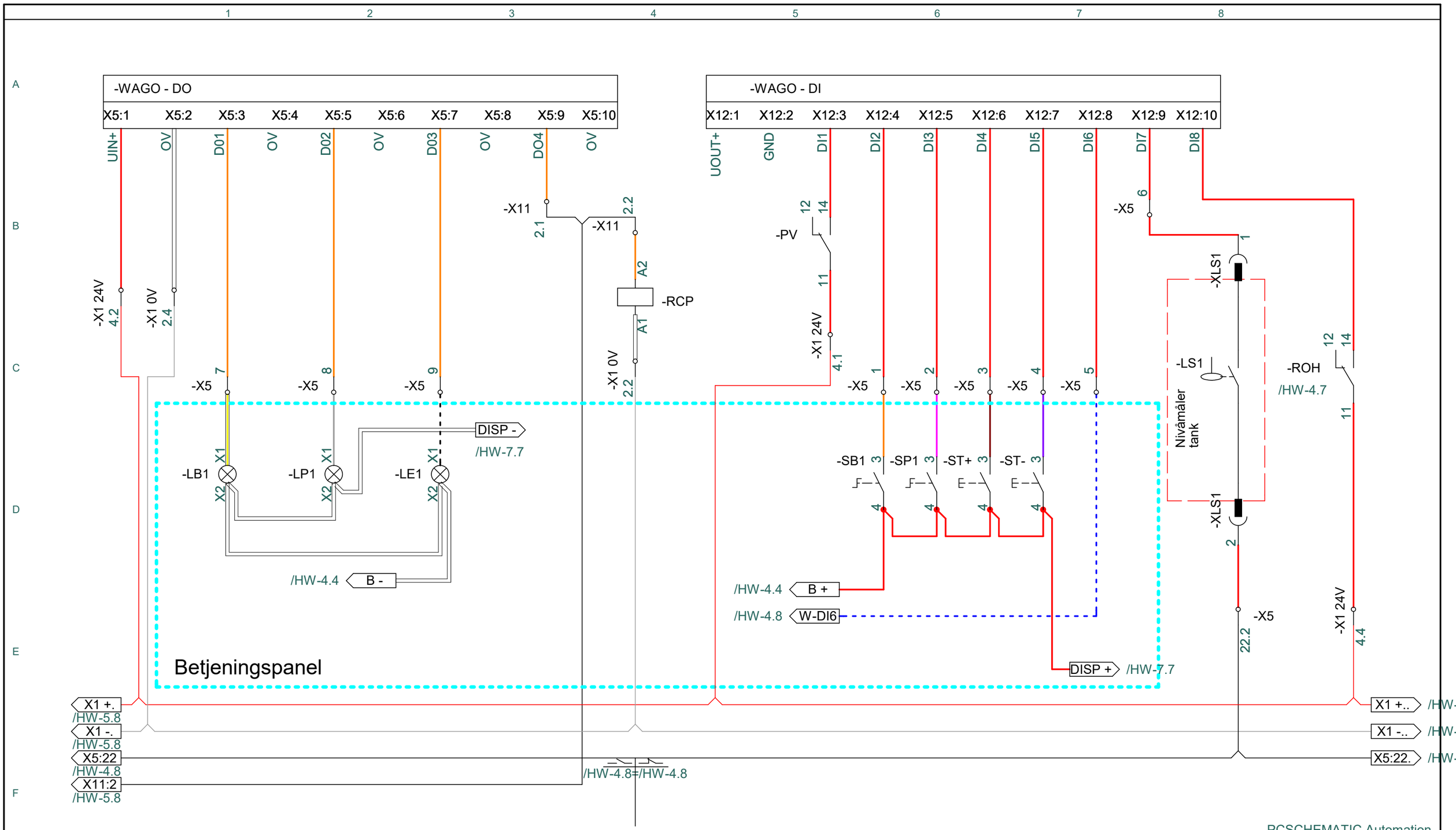

PCSCHEMATIC Automation

Project title:	**HW6000E**	**Project no.:**	**Rev 7**	**Project rev.:**	**Page** **HW-6**
Customer:		DCC:			Scale: 1:1
Page title:	Styrestrøm - PLS Digitale innganger	Dwg. no.:		Page rev.:	Previous page: HW-5
File name:	EL-maskin 108kW - rev8	Eng. (proj/page):	WEN	Last print: 10.04.2026	Next page: HW-7
Page ref.:		Appr. (date/init):		Last edit: 09.02.2026	Total no. of pages: 13

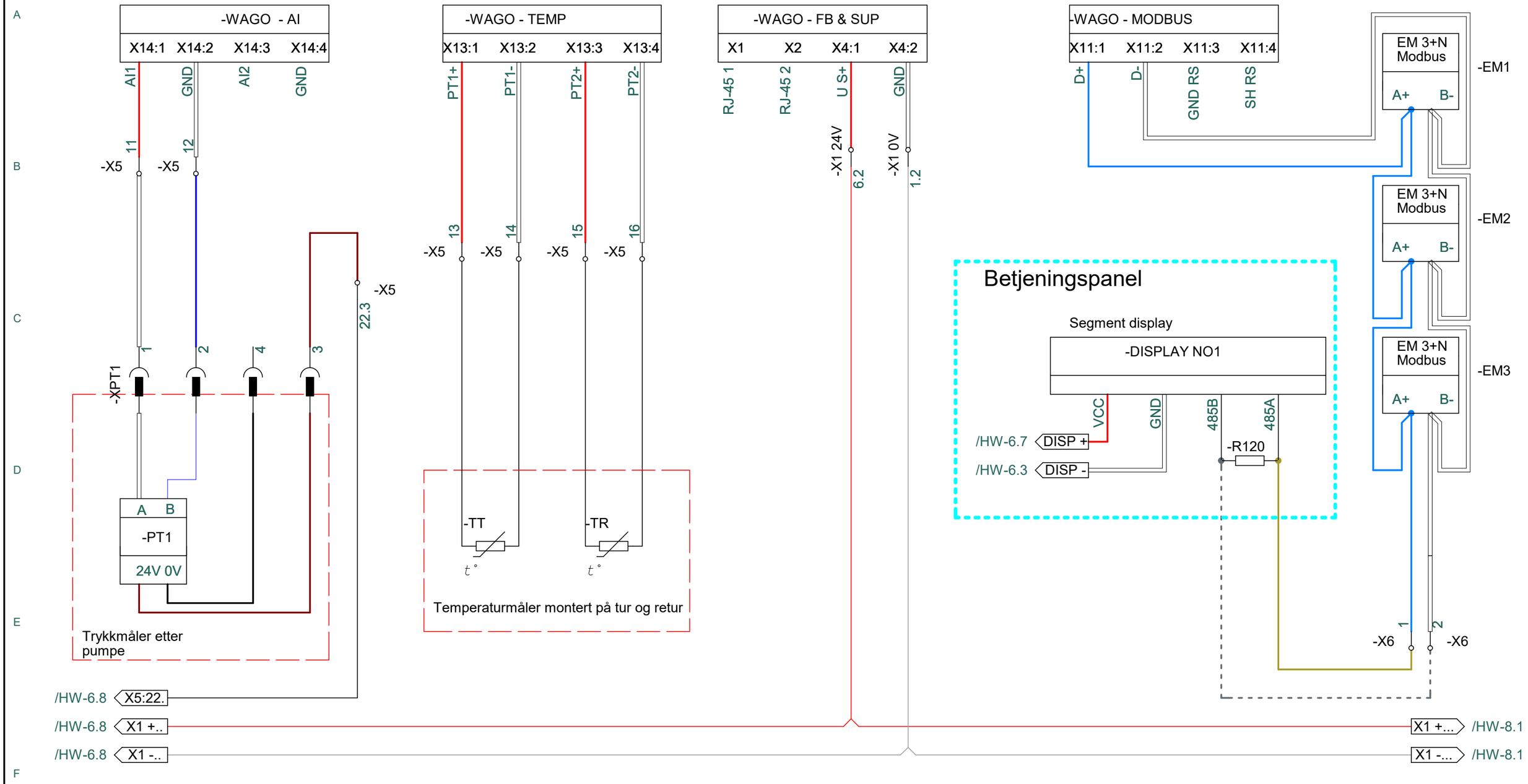

PCSCHEMATIC Automation

Project title:	**HW6000E**	**Project no.:**	**Rev 7**	**Project rev.:**	**Page** **HW-7**
Customer:		DCC:			Scale: 1:1
Page title:	Styrestrøm - PLS Digitale utganger	Dwg. no.:		Page rev.:	Previous page: HW-6
File name:	EL-maskin 108kW - rev8	Eng. (proj/page):	WEN	Last print: 10.04.2026	Next page: HW-8
Page ref.:		Appr. (date/init):		Last edit: 10.09.2025	Total no. of pages: 13

Digital utgangsmodul

-MOXA E1211 - DO -NR1

-MOXA E1211 - DO NR2

-Power moxa

1 2 3 4 5 6 7 8 9 10 11 12 13 14 15 16 17 18 19 20

V+ V- IE DO 0 DO 1 DO 2 DO 3 GND DO 4 DO 5 DO 6 DO 7 DO 8 DO 9 DO 10 DO 11 GND DO 12 DO 13 DO 14 DO 15

-K1 -K2 -K3 -K4 -K5 -K6 -K7 -K8 -RWL -K9

A1 A2

-LXM1 -LXM2 -LXM3

X1 X2

-RES

/HW-4.8

12 14 11

-X1 24V -X1 0V -XPE

4.3 3.3 2.1 6.3 2.1 6.4

/HW-7.8 X1 +...

/HW-7.8 X1 -...

/HW-1.1 /HW-1.2 /HW-1.3 /HW-2.1 /HW-2.2 /HW-2.4 /HW-2.6 /HW-2.7 /HW-2.8 /HW-4.1=/HW-4.1

PCSCHEMATIC Automation

Project title:	**HW6000E**	**Project no.:**	**Rev 7**	**Project rev.:**	**Page** **HW-8**
Customer:		DCC:			Scale: 1:1
Page title:	Styrestrøm - Utgangs modul nr1	Dwg. no.:		Page rev.:	Previous page: HW-7
File name:	EL-maskin 108kW - rev8	Eng. (proj/page):	WEN	Last print: 10.04.2026	Next page: HW-A-2
Page ref.:		Appr. (date/init):		Last edit: 04.11.2025	Total no. of pages: 13

Component	Article no.	Type	Function	Description	Manufacturer	Position
-B12V			12V Batteri			/HW-5.4
-BC12V	MXS 5.0 EU	MXS 5.0 EU	Batteri lader	Ctek MXS 5.0	Ctek	/HW-3.6
-BG	M148A	M148A	Batterivakt		Kemo	/HW-5.2
-DISPLAY NO1			Segment display			/HW-7.7
-EM1	SDM630-Modbus V2	EM 3+N	Energimåler nr 1	Three Phase Energy Meter	Eastron	/HW-1.1
-EM2	SDM630-Modbus V2	EM 3+N	Energimåler nr 3	Three Phase Energy Meter	--	/HW-2.4
-EM3	SDM630-Modbus V2	EM 3+N	Energimåler nr 4	Three Phase Energy Meter	--	/HW-2.8
-F1	A9Z21463	A9Z21463	63A JB		Schneider Electric	/HW-1.2
-F2	A9Z21463	A9Z21463	63A JB		--	/HW-2.4
-F3	A9Z21463	A9Z21463	63A JB		--	/HW-2.8
-F4	A9F07320	A9F07320	6A 3 fase		--	/HW-1.4
-F5	A9F07210	A9F07210	6A 1fase		--	/HW-1.8
-F6		Lovato	10A 1~ brud			/HW-1.8
-F7	A9F07320	A9F07320	20A 3 fase		Schneider Electric	/HW-1.1
-F8	A9F07320	A9F07320	20A 3 fase		--	/HW-1.2
-F9	A9F07320	A9F07320	20A 3 fase		--	/HW-1.3
-F10	A9F07320	A9F07320	20A 3 fase		--	/HW-2.2
-F11	A9F07320	A9F07320	20A 3 fase		--	/HW-2.3
-F12	A9F07320	A9F07320	20A 3 fase		--	/HW-2.4
-F13	A9F07320	A9F07320	20A 3 fase		--	/HW-2.6
-F14	A9F07320	A9F07320	20A 3 fase		--	/HW-2.7
-F15	A9F07320	A9F07320	20A 3 fase		--	/HW-2.8
-FB			Batteri sikring glass 1A			/HW-5.2
-H1			Varme element 12KW			/HW-1.1
-H2			Varme element 12kW			/HW-1.2
-H3			Varme element 12kW			/HW-1.3
-H4			Varme element 12kW			/HW-2.1
-H5			Varme element 12kW			/HW-2.2

Component	Article no.	Type	Function	Description	Manufacturer	Position
-H6			Varme element 12kW			/HW-2.4
-H7			Varme element 12kW			/HW-2.6
-H8			Varme element 12kW			/HW-2.7
-H9			Varme element 12kW			/HW-2.8
-HC	BW7018-23050	BW7018-23050	Timeteller		HugoMuller	/HW-1.4
-K1	22.32.0.024.4320	22.32.0.024.4320	Kontaktor varmeelement nr 1		Finder	/HW-8.1
-K2	22.32.0.024.4320	22.32.0.024.4320	Kontaktor varmeelement nr 2		--	/HW-8.2
-K3	22.32.0.024.4320	22.32.0.024.4320	Kontaktor varmeelement nr 3		--	/HW-8.2
-K4	22.32.0.024.4320	22.32.0.024.4320	Kontaktor varmeelement nr 4		--	/HW-8.2
-K5	22.32.0.024.4320	22.32.0.024.4320	Kontaktor varmeelement nr 5		--	/HW-8.3
-K6	22.32.0.024.4320	22.32.0.024.4320	Kontaktor varmeelement nr 6		--	/HW-8.4
-K7	22.32.0.024.4320	22.32.0.024.4320	Kontaktor varmeelement nr 7		--	/HW-8.4
-K8	22.32.0.024.4320	22.32.0.024.4320	Kontaktor varmeelement nr 8		--	/HW-8.5
-K9	22.32.0.024.4320	22.32.0.024.4320	Kontaktor varmeelement nr 9		--	/HW-8.6
-KCP	K3-18ND01-230V	K3-18ND01-230V	Kontaktor sirkulasjonspumpe		Benedict	/HW-4.8
-KES	788-312	788-312	Kontaktor for nødstop aktivert		Wago	/HW-4.5
-KHR	A9C20732	A9C20732	Kontaktor trommel pumpe		Schneider electric	/HW-4.3
-LB1	XB4BVB4	XB4BVB4	Lys signal for brenner aktiv		Schneider Electric	/HW-6.1
-LE1	XB4BVB4	XB4BVB4	Lys signal for aktiv feil		--	/HW-6.3
-LHR	XB4BVB4	XB4BVB4	Lys for trommel drift		--	/HW-4.3
-LIC	XB4BVB4	XB4BVB4	Lys inni elskapet		--	/HW-5.7
-LIHB	XB4BVB4	XB4BVB4	Lys ved trommel		--	/HW-5.8
-LIHF	XB4BVB4	XB4BVB4	Lys ved kjele		--	/HW-5.8
-LP1	XB4BVB4	XB4BVB4	Lys signal for pumpe aktiv		--	/HW-6.2
-LS1			Nivåmåler buffertank			/HW-6.8
-LUH	XB4BVB4	XB4BVB4	Lyssignal på taket av maskinen		Schneider Electric	/HW-4.1
-LXM1	XB4BVB4	XB4BVB4	Bekreftelses lys for XM1 tilkoblet		--	/HW-8.8
-LXM2	XB4BVB4	XB4BVB4	Bekreftelses lys for XM2 tilkoblet		--	/HW-8.8

Component	Article no.	Type	Function	Description	Manufacturer	Position
-LXM3	XB4BVB4	XB4BVB4	Bekreftelses lys for XM3 tilkoblet		Schneider Electric	/HW-8.8
-MOXA E1211 - DO -NR1			Digital utgangsmodul			/HW-8.1
-MOXA E1211 - DO NR2			Digital utgangsmodul			/HW-8.5
-OH			Overopphetningsvern			/HW-4.8
-OS			Stikkontakt 6A			/HW-3.1
-PCP			Sirkulasjonspumpe 3~			/HW-1.4
-PGF			Pumpe for HTF			/HW-3.5
-PH			Fase vender			/HW-1.4
-PHR			Pumpe for trommel			/HW-3.2
-PSU12V	LPV-60	LPV-60	Strømforsyning LED lys		Mean Well	/HW-3.7
-PSU24V	HDR-24-30	HDR-24	Strømforsyning 24V		--	/HW-4.1
-PT1			Trykk transmitter			/HW-7.1
-PV	GRV8-03	GRV8-03	Fasevakt 3~	Fasevakt 3~	Geya	/HW-1.5
-R24V	857-359	857-359	Rele for 12v/24V tilførsel GPS		Wago	/HW-5.1
-R120			120Ohms motstand på modbus signalet			/HW-7.8
-RCP	857-359	857-359	Rele til sirkulasjonspumpe		Wago	/HW-6.4
-RES	857-359	857-359	Rele nødstopp styring		--	/HW-4.8
-ROH	857-359	857-359	Rele overopphetningsvern		--	/HW-4.8
-RWL	857-359	857-359	Rele for varsellys tak		--	/HW-8.6
-SB1			Boiler start			/HW-6.6
-SES			Nødstopp bryter			/HW-4.6
-SGF			Bryter for fylling av HTF			/HW-3.4
-SHR			Bryter for trommel pumpe			/HW-4.2
-SKAP VIFTE			Skap vifte Elskap			/HW-4.2
-SP1			Sirkulasjons pumpe start			/HW-6.6
-SSE			Service vendebryter			/HW-1.7
-ST+			Justering av temperatur opp			/HW-6.6
-ST-			Justering av temperatur ned			/HW-6.7

Component	Article no.	Type	Function	Description	Manufacturer	Position
-TR			Retur temperatur			/HW-7.3
-TRB255	TRB255	TRB255	4G/GPS modul	TRB255	Teltonika	/HW-5.1
-TT			Tur temperatur			/HW-7.3
-TU			Track Unit Tillvalg			/HW-5.8
-WAGO - AI						/HW-7.1
-WAGO - DI						/HW-6.5
-WAGO - DO						/HW-6.1
-WAGO - FB & SUP						/HW-7.5
-WAGO - MODBUS						/HW-7.7
-WAGO - TEMP						/HW-7.3
-X1 0V		2202-1401	Rekkeklemme for styrestrøm 24V			/HW-8.1
-X1 24V		2202-1401	Rekkeklemme for styrestrøm 24V			/HW-8.8
-X2L	2202-1401	2202-1401	Rekkeklemme for styrestrøm FJ6		Wago	/HW-4.1
-X2N	2202-1401	2202-1401	Rekkeklemme for styrestrøm FJ6		--	/HW-4.1
-X3	2202-1201	2202-1201	Rekkeklemme for styrestrøm F1		--	/HW-3.2
-X3L	2202-1401	2202-1401	Rekkeklemme for styrestrøm F1		--	/HW-3.6
-X3N	2202-1201	2202-1201	Rekkeklemme for styrestrøm F1		--	/HW-3.5
-X4	2202-1201	2202-1201	Rekkeklemme for sirkulasjonspumpe		--	/HW-1.4
-X5	2202-1201	2202-1201	Rekkeklemme for styresystem		--	/HW-7.2
-X6	2202-1201	2202-1201	Rekkeklemme for modbus		--	/HW-7.8
-X7	2202-1401	2202-1401	Rekkeklemme for LED lys		--	/HW-5.7
-X8	2202-1401	2202-1401	Rekkeklemme for batteri styring		--	/HW-5.3
-X9	2202-1201	2202-1201	Rekkeklemme for kontaktorer til varmelementer		--	/HW-2.8
-X10	2202-1201	2202-1201	Rekkeklemme fordeling N leder styrestrøm		--	/HW-1.6
-X11	2202-1201	2202-1201	Rekkeklemme forstart av pumpe og signal til track unit.		--	/HW-6.4
-XB12V			Hirshmanplugg til batteri			/HW-5.4
-XIS			Apparatinntak service 16A			/HW-1.7
-XLIHB			Hirshmanplugg til lys ved betjeningspanel			/HW-5.8

Component	Article no.	Type	Function	Description	Manufacturer	Position
-XLIHF			Hirshmanplugg til lys ved kjelen			/HW-5.8
-XLS1			Hirshmanplugg til nivå HTF buffertank			/HW-6.8
-XLUH			Hirshmanplugg Lys til varsel lys HUV			/HW-4.1
-XM1			Apparatinntak 63A - Nr 1			/HW-1.1
-XM2			Apparatinntak 63A - Nr 3			/HW-2.2
-XM3			Apparatinntak 63A - Nr 4			/HW-2.6
-XOS			Hirshmanplugg til stikkontakt 6A			/HW-3.2
-XPCP			Hirshmanplugg sirkulasjonspumpe			/HW-1.4
-XPE			Jord rekkeklemme			/HW-8.1
-XPGF			Hirshmanplugg HTF pumpe			/HW-3.5
-XPHR			Hirshmanplugg til trommel pumpe			/HW-3.3
-XPT1			Hirshmanplugg trykksensor			/HW-7.1
-XSGF			Hirshmanplugg Bryter HTF fylling			/HW-3.4
-XTU			Hirshmanplugg til batteri			/HW-5.7