HeatWork®

Tecnical Support Phone : +47 488 93 271
Heatwork Office Phone : +47 769 65 890

DRAWING REV

HW-MY35 AUTOSTART SYSTEM

Yellow
Red Green

GENERATOR ERROR
Art.1084

OPERATION
Art.1083

TEG
Art.2351

STOP
Art.1151

PQ 6A
Art.1100 Art.1100

XM1
6 GENERATOR +
7 GENERATOR CODE LIGHT
14 GENERATOR START
15 GENERATOR STOP
Art.2397

AUTOSTART
Art.1029

KNE
Art.2350

KAG
Art.2350

TSA
Art.2351
40 SEC

TAG
Art.2351
20 SEC

TNE
Art.2351
5 MIN

TSF
Art.2351
4.2 MIN

RE2

BA
Art.2364

XM1
5
13
Art.2397

Battery
Art.2332

XM1
9 230V AC
1 230V AC
10 GENERATOR
2 GENERATOR
Art.2397

HeatWork®
Tecnical Support Phone : +47 488 93 271
Heatwork Office Phone : +47 769 65 890

DRAWING REV

HW-MY35 FLUID SYSTEM

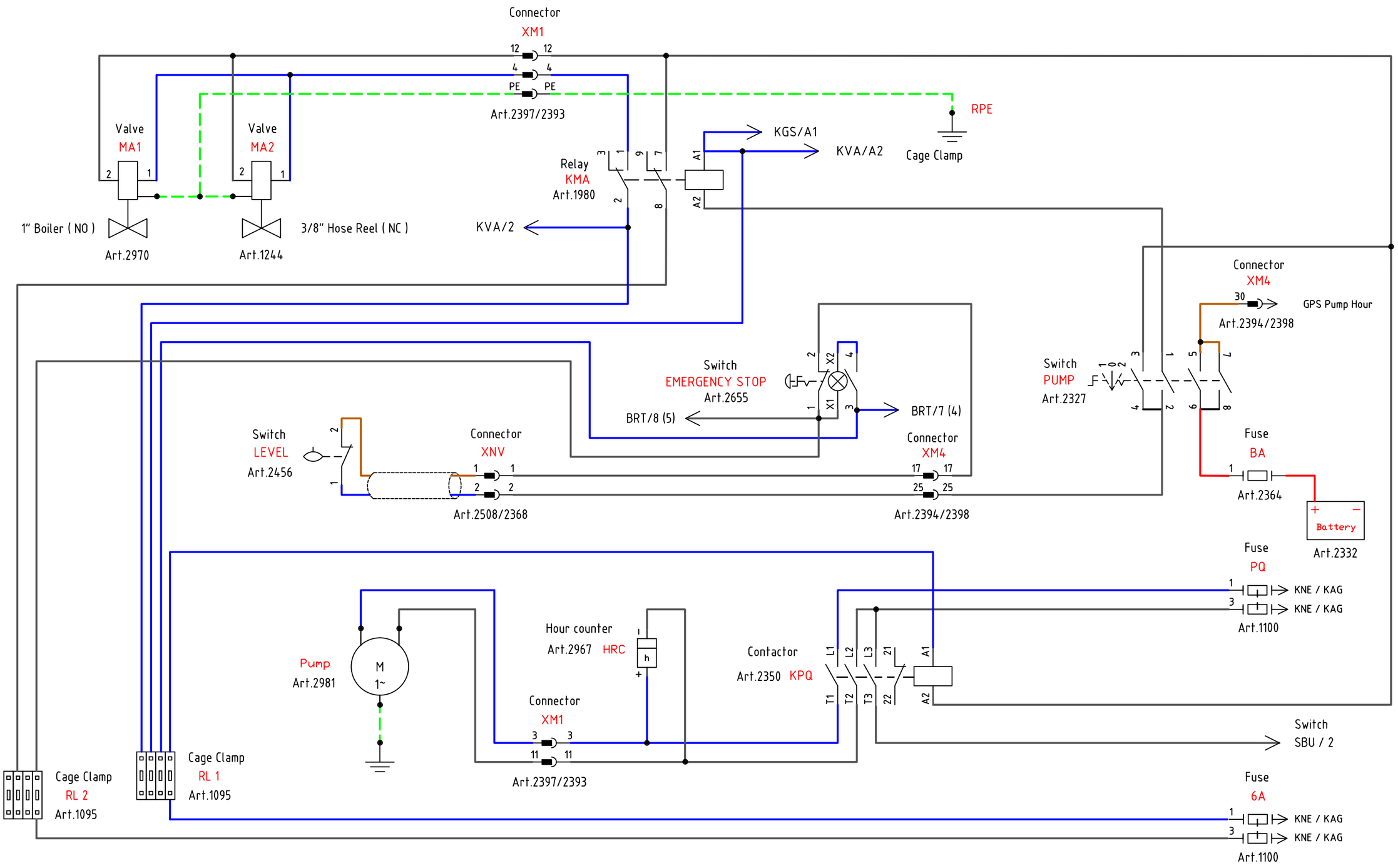

HeatWork®

Tecnical Support Phone : +47 488 93 271
Heatwork Office Phone : +47 769 65 890

DRAWING REV

HW-MY35 BOILER SYSTEM

GRB/A1

Cage Clamp
RBU
PE - Burner connector
S3 - Burner connector
L1 - Burner connector
N - Burner connector
Art.1095

RPE
Cage Clamp

Relay
KBR
Art.1076/1980
KGS/A2

GRO/A2
Relay
KVA
Art.1980
KMA/2
KMA/A1

Relay
KBS
Art.2086
XM4/29

GSM/1
RE2
Cage Clamp

GRO/A1

Connector
XM4
27 27
19 19
Art.2394/2398

Led Light
BURNER ERROR
Art.1084

Switch
BURNER
Art.1029

Led Light
PUMP ERROR
Art.1084

Safety
Switch
BRO
Art.1823

1 (4)
2 (6)
4 (7)
5 (8)
11
12
BRT
TEMP REGULATION
Art.1128

Zenerdiode
Art.2572-1
KPQ / T3

Led Light (Roof)
VARNING LIGHT
Art.2917

Connector
XVA
2 2
1 1
Art.2508/2368

PT-100
SENSOR BOILER
Art.1129

Cage Clamp
RL 2
Art.1095

Cage Clamp
RL 1
Art.1095

Fuse
6A
1 KNE / KAG
3 KNE / KAG
Art.1100